This is a digital copy of a book that was preserved for generations on library shelves before it was carefully scanned by Google as part of a project to make the world's books discoverable online.

It has survived long enough for the copyright to expire and the book to enter the public domain. A public domain book is one that was never subject to copyright or whose legal copyright term has expired. Whether a book is in the public domain may vary country to country. Public domain books are our gateways to the past, representing a wealth of history, culture and knowledge that's often difficult to discover.

Marks, notations and other marginalia present in the original volume will appear in this file - a reminder of this book's long journey from the publisher to a library and finally to you.

Usage guidelines

Google is proud to partner with libraries to digitize public domain materials and make them widely accessible. Public domain books belong to the public and we are merely their custodians. Nevertheless, this work is expensive, so in order to keep providing this resource, we have taken steps to prevent abuse by commercial parties, including placing technical restrictions on automated querying.

We also ask that you:

+ *Make non-commercial use of the files* We designed Google Book Search for use by individuals, and we request that you use these files for personal, non-commercial purposes.
+ *Refrain from automated querying* Do not send automated queries of any sort to Google's system: If you are conducting research on machine translation, optical character recognition or other areas where access to a large amount of text is helpful, please contact us. We encourage the use of public domain materials for these purposes and may be able to help.
+ *Maintain attribution* The Google "watermark" you see on each file is essential for informing people about this project and helping them find additional materials through Google Book Search. Please do not remove it.
+ *Keep it legal* Whatever your use, remember that you are responsible for ensuring that what you are doing is legal. Do not assume that just because we believe a book is in the public domain for users in the United States, that the work is also in the public domain for users in other countries. Whether a book is still in copyright varies from country to country, and we can't offer guidance on whether any specific use of any specific book is allowed. Please do not assume that a book's appearance in Google Book Search means it can be used in any manner anywhere in the world. Copyright infringement liability can be quite severe.

About Google Book Search

Google's mission is to organize the world's information and to make it universally accessible and useful. Google Book Search helps readers discover the world's books while helping authors and publishers reach new audiences. You can search through the full text of this book on the web at `http://books.google.com/`

1837
ARTES VERITAS SCIENTIA
LIBRARY OF THE
UNIVERSITY OF MICHIGAN
TUEBOR
SI QUÆRIS PENINSULAM AMŒNAM
CIRCUMSPICE
COLLEGE
OF
ENGINEERING

TA
1
.M3

THE MANCHESTER ASSOCIATION OF ENGINEERS
ESTABLISHED
1856.

TRANSACTIONS,

1893.

PUBLISHED BY THE ASSOCIATION.

MANCHESTER:
HERALD & WALKER, PRINTERS, POOL FOLD CHAMBERS, OFF CHAPEL WALKS.
1894.

CONTENTS.

1893.

	PAGE.
Index	—
List of Plates	—
Inaugural Address by the President	1
Felt Hat Manufacture and Machinery	21
Transmission of Power by Compressed Air	45
The relations between employers and workmen in engineering works	105
Main and other Bearings	137
The Scientific Work of G. A. Hirn	145
Ventilation, Heating and Humidity	205
On the Influence of some Chemical Agents in producing Injury to Iron and Steel	245
Annual Report of Council, 1893	276

Engin. Lib.
Engin
Sutton
4-2-27
14467

INDEX.

1893.

ADDRESS OF PRESIDENT, T. Daniels, on Capital and labour in relation to Engineering, 1.

ANNUAL REPORT OF COUNCIL: Discussion *re* pecuniary Benefits and Resolution thereon, 275.—Report, 276.—Additions to membership, 276, 277, 278.—Members deceased, 277.—Members resigned, 277.—Members erased, 277.—Papers read, 278.—Anniversary Dinner, 279.—Library, 282.—Opening of discussion session, 283.—Obituary notices, 284.—Excursions: Peel Mills, Bury, 286; s.s. "Campania," 291; Macclesfield, 292.—Treasurer's General Cash Account, 294.—Superannuation Fund Account, 295.

ASHBURY, T., Remarks on Address, 18.– on The relations between employers and workmen, 124.—on Compressed air, 77.—on Main Bearings, 144.—on W. Thomson's paper, 263.—Proposer of amendment of rule 13 *re* pecuniary benefits, 275.

BEARINGS, MAIN AND OTHERS.—Best design of, discussion, introduced by Alfred Saxon, of Manchester, 137.

BEASTOW, W. H., Remarks on W. Thomson's paper, 262.

BEELEY, CARTER, Remarks on W. Thomson's paper, 263.

BOSWELL, S., Remarks on Main Bearings, 144.—on W. Thomson's paper, 264.

BROWN, A. G., Remarks on Main Bearings, 144.

CARTER, WILLIAM, Remarks on Compressed Air, 79.

COMPRESSED AIR, TRANSMISSION OF POWER BY.—Paper on, by W. J. Jenkins, of Manchester, 45.—Introduction indicating that the modern tendency is towards the centralization of the supply of light, heat, and power, 45.—Progress in Manchester in the supply of water, gas, electricity, and hydraulic power, 45.—The hydraulic system valuable, but limited to slow-moving mechanisms, 46.—Need for a system to cover the wide field of usefulness between the limits of the hydraulic and electrical systems, 46.—Transmission of power by compressed air

such a system, 46.—Established plants generally costly in working, 47.—Defective apparatus too often the cause, 47.—Methods of compressing, 48.—Perfect diagrams, 51.—Practical diagrams and defects in same, 52.—Modern improvements in compressors, and results, 53.—Defects in valves, and remedies, 60.—Efficiency of compressors, 61.—Distributing Mains, 62.—Loss from leakage and friction, 62.—Air engines or motors, 64.—Effect of moisture on working and economy of motors, 69.—Value of heating, and injection of water into compressed air, 67.—The general economy and usefulness of the system, 70.—Discussion, 71.—The Birmingham Compressed Air Power Undertaking. Explanation of its failure, by John Sturgeon, 79.—Appendix of calculations *re* air compressing, 86.—Diagrams, 9 plates.

CONSTANTINE, E. G., Remarks on Compressed Air, 78.—on Main Bearings, 143.

CORBETT, J., Remarks on W. Thomson's paper, 262.

DANIELS, T., Inaugural Address, 1.—Remarks on Felt hat manufacture, 39.—on The relations between employers and workmen, 122, 123, 133.—on Compressed Air, 77.—on Main Bearings, 143.

DONKIN, BRYAN, Paper on the Scientific work of G. A. Hirn, 145.

FELT HAT MANUFACTURE AND MACHINERY.—Paper on, by Joseph Marshall, of Hyde, 21.—Introduction, 21.—Hats exported, 22.—Early methods of manufacture, 23.—Hatting, 24.— Wool-felt hats, 32.—Frame hat, 34.—Veneering, 34.—Discussion, 39.—Reply, 42.—Diagrams, 14 plates.

GEM, A., Remarks on pitting, 262.

HANMER, W., Remarks on Ventilation, 243.

HIRN, G. A., SCIENTIFIC WORK OF.—Paper on, by Bryan Donkin, of London, 145.—Early life, 145.—Experimental and philosophical work, 146.—Friction experiments, 148.—Mechanical theory of heat, 149.—Experiments on the steam engine to determine the transformation of heat into work, 152.—Steam jackets, 154.—Single cylinder engines, 156.—Superheating steam, 157.—Influence of the walls of an engine cylinder upon the action of the steam, 160.—Heat, a separate force, 162.—External and internal work, 166.—Saturated and superheated steam, 166.—Laws governing the action of gases, 167.—Steam engine and the action of the walls, 168.—Condensation of steam, 170.—Contest with Zeuner, 172.—Atomic theory, 173.—Calorific force, 173.—Molecular attraction, 175.—Human thermo-dynamics, 176.—Vital heat of the body, 177.—Experiments on the amount of heat

developed by human beings when in action, 178.—Measurement of oxygen inhaled, 179.—Respiration, the principal source of heat, 183.—Gases in their relation to sound, 184.—Theories of nature, etc., 184, *et seq.*

INGRAM, M., Remarks on The relations between employers and workmen, 129.

IORNS, C. R., Paper on The relations between employers and workmen in engineering works, 105.

JENKINS, W. J., Paper on The transmission of power by compressed air, 45.

LEWIS, G., Remarks on Transmission of power by compressed air, 71.

MARSHALL, JOSEPH, Paper on Felt hat manufacture and machinery, 21.

MARSHALL, E., Remarks on Compressed air, 77.

NASMITH, JOSEPH, Remarks on Felt hat manufacture, 39.—on The relations between employers and workmen, 120.—on Main Bearings, 144.—Paper on Ventilation, Heating and Humidity, 205.

REA, A., Remarks on The relations between employers and workmen, 123, 126.—on The transmission of power by compressed air, 72.

RENOLD, HANS, Remarks on Ventilation, 243.

SAYERS, R. J. H., Remarks on Compressed air, 73.

SAXON, A., Remarks on Address, 18.—on Felt hat manufacture, 41.—on The relations between employers and workmen, 129.—on Transmission of power by compressed air, 71.—Introducer of discussion on Main Bearings, 137, 144.—on W. Thomson's paper, 262.—Seconder of proposed amendment of Rule 13, 275.

SAXON, G., Remarks on The relations between employers and workmen, 118.

SETTLE, T., Remarks on Main Bearings, 143, 144.—on W. Thomson's paper, 262, 263.

STURGEON, J., Remarks on Compressed air, 79.

SUTCLIFFE, J. D., Remarks on Ventilation, 240.

SWIFT, JAMES, Remarks on The relations between employers and workmen, 132.

TAYLOR, JOHN, Remarks on Compressed air, 77.

INDEX.

THE INFLUENCE OF SOME CHEMICAL AGENTS IN PRODUCING INJURY TO IRON AND STEEL.—Paper on, by W. Thomson, of Manchester, 245.—Affinity of iron and steel for oxygen, 246.—Electric currents produced when iron oxidises or dissolves, 247.—Theory of an electric couple, 247.—Action of different bodies in electrically promoting and in preventing the oxidation of iron, 247.—Hannay's system of preserving iron from corrosion in steam boilers, 248.—Action of water on iron and steel, when riveted together, in producing oxidation of the one or of the other, 248.—Method of determining electrically their position towards each other, 249.—Electric tests made between iron and steel and between different kinds of steel, 250.—Relative effects of dry and of moist oxygen, and of carbonic acid, and of a mixture of moist oxygen and carbonic acid on iron and steel, 254.—Oxidation and pitting of iron and steel boilers, 254.—Action of waters, containing free acid, on steam boilers, and mode of preventing, 255.—Action of caustic soda on steel boilers when used for concentrating weak liquors, 255 —Experiments made to determine the effect of weak and strong, and hot and cold solutions of caustic soda on iron and steel wire during many months, 256.—Action of impure soda ash on boilers when used to prevent incrustation, 255.—Influence of nitrates and nitrites contained in water used for steam raising, in producing pitting, even in presence of soda ash, 256.—Chemical composition of ordinary rust and of the oxide produced inside steam boilers, 257.—The Barff process for protecting iron from rusting, 259.—Painting as a protection of iron against oxidation or rusting, 259.—Experiments to determine the best form of paint or varnish to employ for the protection of iron from rust and corrosion, 259.—Discussion, 262.—Reply, 265.

THE RELATIONS BETWEEN EMPLOYERS AND WORKMEN IN ENGINEERING WORKS.—Paper on, by C. R. Iorns, of Broadheath, 105.—Discussion, 117.—Reply 134.

THOMPSON, W., Paper on The influence of some chemical agents in producing injury to iron and steel, 245.

VENTILATION, HEATING AND HUMIDITY.—Paper on, by Mr. Joseph Nasmith, of Manchester, 205.—Ventilation defined, 205.—How to effect ventilation, 207.—Extraction, 208.—Mechanical extraction, 210.—Inlet to, and distribution of air in a building, 212.—Plenum system, 212.—Heating, 214.—Humidity, 218.—Explanation of the relative humidity of air, 221.—Practical application of same, 222.—Maximum limits of humidity of atmosphere at given atmospheres, 224.—Two types of humidifying apparatus, 225.—Tattersall's humidifier, 225.—Drosophore ditto, 226.—Pye's ditto, 226.—Howarth's ditto, 226.—Object of humidity, 227.—The true system of ventilation, 229.—Conclusions, 238.—Discussion, 239.—Reply, 244.—Diagrams, 9 plates.

WALTHEW, JAMES, Remarks on Felt hat manufacture, 42; on Ventilation, 248.

WEBB, H., Remarks on The relations between employers and workmen, 117, 130.—on Compressed air, 75.—on Ventilation, etc., 239.

WEST, J., Remarks on The relations between employers and workmen, 129. —on Compressed air, 75.—on Chemistry and Engineering, 268.

LIST OF PLATES.

To illustrate "Felt Hat Manufacture and Machinery." Page 43.

Plate 1. Picking Machine.
" 2. Fur Mixing do.
" 3. Fur Forming do.
" 4. Settling do.
" 5. Crank Bumping Machine.
" 6. Twisting do.
" 7. Brushing do.
" 8. Hat Pressing do.
" 9. Curling Press.
" 10. Wool Forming do.
" 11. Cup and Cone Hardening Machine.
" 12. Flat Hardening do.
" 13. Tappitt Bumping do.
" 14. Fur and Wool Fibres.

To Illustrate "The Transmission of Power by Compressed Air." Page 102.

Plate 1. Sommeiller's Hydraulic Compressor.
" 2. Ideal Diagrams of Air Compressor.
" 3. Colladon's Water Nozzle: Actual Diagram showing defects of Air Compressor.
" 4. Diagram showing Adiabiatic and Isothermal Curves with tables of Ordinates for Intermediate Curves.
" 5. Suction Valves.
" 6. Delivery Valves.
" 7. Joint for Mains—Indicator Diagram.
" 8. Delivery Valve worked by cam.

To Illustrate "Main and other Bearings."

Fig. 1. page 138. Ordinary Pedestal.
" 2. " 139. Angular do.
" 3. " 139. Do. do.
" 4. " 140. Three-step Adjustable Pedestal
" 5. " 140. Four-step Do. do.

LIST OF PLATES.

To Illustrate "The Scientific Work of G. A. Hirn." Page 144. Portrait of G. A. Hirn.

To Illustrate "Ventilation, Heating, and Humidity." Page 245.

Plate 1. Pacific Mill.
" 2. Proposed Ventilation for Mill.
" 3. Tattersall's Humidifier.
" 4. Drosophore Humidifier.
" 5. Plan of Ring and Weaving Room showing position of Humidifier.
" 6. Howarth's Humidifier.
" 7. Sturtevant system of Ventilation and Heating.
" 8. Blackman-Smead System.
" 9. Pye's Humidifier.

To Illustrate "On the influence of some Chemical Agents in producing injury to Iron and steel. Page 270.

Plate 1. Fracture of Plate.

INAUGURAL ADDRESS,

BY THE PRESIDENT,

Mr. THOS. DANIELS, M.I.Mech.E.,

DELIVERED

SATURDAY, 14TH JANUARY, 1893

In accordance with the usual custom at the commencement of our year's operations, I shall this evening make a few remarks on such topics as I think may be in harmony with the objects of this Association, and upon which it is eminently desirable that just thoughts and sound opinions should be formed. With the special subject to which allusion will be eventually made, I feel that I ought to be more conversant, but I trust that my brief references may cause more learned and able persons to think about the question, and probably carry it to a successful solution.

In years past the Association has been addressed by many excellent men on nearly all the questions connected with our profession. In Civil Engineering we have been led, as it were, by a master hand, from the Pyramids of Egypt, past all the mighty works that were done in our fathers' days and in the old time before them, over the Forth Bridge, and down to the construction of the Manchester Ship Canal.

As regards material, the modern Tubal Cains who have travelled through the old and new continents in search of the hidden mysteries of nature and science, assure us that the quality of our metals is unsurpassed. Therefore, the mechanical engineer can be supplied with metals of any requisite strength to stand the pressure and motive powers employed, this material, in the course of its manufacture, having been subjected to such continual tests and analyses as to make it effectual for its purposes.

Again, our machine designs are believed to be the best for the manufacture of all textiles, and our modern machine tools for working metals are equally effective.

The agricultural engineering section have also maintained their supremacy against foreign competitors, and in this branch of engineering it is worthy of notice that capital and labour have always worked in unison.

In ship-building too, I think it may be fairly assumed that our countrymen are worthy competitors, and it may be here mentioned that when the first steamship comes up to Manchester the marine engine will be coming home, the present design having been developed from the original steam hammer engine made by Nasmyth many years ago. The late Mr. R. Wilson invented the screw propeller, all particulars of which may be seen at Patricroft. Our esteemed past-president, Alderman Bailey, has told us that the first iron steamboat was launched not far from Salford, so that when the Manchester Ship Canal is completed we may be able to build ships of war and arm them with Whitworth's guns.

As regards the mode of mechanical locomotion our appliances will probably remain the same until the electric locomotive is more developed. At present, however, great speeds can be attained by adhesion from the level to an incline of 1 in 12. The Rack locomotive can be worked to an incline of 1 in 3¼, and we haul by cable from this incline to the direct vertical. Recently, the "Engineer" has endeavoured to impress upon us the advisability of imitating the Americans in the design of their locomotive, especially in that type forwarded to the Colonies, and to those countries where the permanent way is not really permanent but constructed of light rails and liable to vary. Under these circumstances, locomotives are required to be very flexible in order to adapt themselves to the road. Flexibility and adaptability, we are informed, are possessed by the American engines, which is not the case with English engines, the latter being too stiff and complicated, and consequently England is losing orders in that particular manufacture. If this be true, it is a serious business, as our locomotive manufacturers are dependent upon foreign and colonial trade, and require orders placing upon the market for at least 1,000 engines per annum to keep contract shops working full time. In reference to this subject, mention may be made that not long since some of these wonderful American engines were sent to one of our Colonies.

They, however, gave considerable trouble, not being sufficiently flexible and in adapting themselves to the road some of the axles broke. These, it was then discovered, were made of a special American mixture called "Muck Scrap." A much more agreeable result accrued from some engines sent to the same district from Manchester, as, being made of the best material and with the best workmanship, they have given every satisfaction.

At the present time England is being met at all points except in India, with American, Belgian, and German competitors, and this competition is rendered all the more severe owing to the great difference in the number of hours worked and less wages paid. It is a mystery to me, however, why these well educated continental artizans should have to work longer hours, and for considerably less wages, in order to compete with the uneducated British workman. It is, undoubtedly, a question for future consideration, but it appears to me that our prominent labour leaders should try and get the continental artizans' working hours to be on a par with those in England before we reduce our present working time. Education upon the continental artizan has a contrary effect to what it has upon the British workman, as, with the latter, the more he is educated and the less number of working hours he has, THE more wages he requires. This brings my remarks to this special subject on which I wish to speak, viz:

CAPITAL AND LABOUR IN RELATION TO ENGINEERING.

Often, in time past, gentlemen who have honoured us with their presence at our anniversary dinner, have impressed upon the Association the very important place which foremen and managers hold between capital and labour; that on their tact, judgment, and good temper is dependent the good feeling which should exist between employer and workman. And no doubt many a foreman or manager in this Association could speak from experience as to the difficulty at times of holding an amicable position between the two forces. Managers and foremen, therefore, having credit for this tact and judgment, ought, in my opinion, to be of great service at the present time; but, somehow, there are those who fancy that they are better acquainted with capital and labour, and can form a bette opinion of any dispute, than those immediately concerned.

Mr. W. Mather and Mr. Jos. Chamberlain have written their plans and opinions, and, of course, on labour questions they are well known authorities. Similarly, a few of the principal labour leaders have indicated their opinions and schemes, some of whom rely upon their own efforts to obtain what they want, whilst others are asking for Parliamentary legislation to attain the desired end.

After having unassisted done such good work in the past, might I ask why should workmen and combinations lose confidence in themselves for the future if there is reason and fairness in their demands? To my mind, if capital and labour must be handicapped with Acts of Parliament at every turn, the best plan would be for the Government to take over the whole business and carry on the trade of the country! Now, gentlemen, in considering the various questions appertaining to capital and labour, the subject requires to be separated into sections, as it is far too vast and intricate to be taken as a whole. Again, to make it even more simple, it is better to take a district, or perhaps a city like our own, and compare it with—say Leeds and Glasgow. I am convinced that just as trade moves from city to city and from district to district, due to favourable or unfavourable conditions, so from the same causes it is forced from our own to foreign countries.

When we can grasp to the full extent the enormous value which capital and labour represent, arrayed like two mighty armies ready for battle, it seems almost impossible to find the leaven which shall so leaven these two immense interests that they will work smoothly and profitably together. I readily admit that, even when the best has been done strikes will occur, though undoubtedly a great many might be avoided. Some portion of the community are under the impression that co-operation is the leaven. Co-operation undoubtedly must prosper with able management, as the members simply deal with themselves, and as long as the co-operators manufacture and sell what the members eat, drink, and wear, all may be satisfactory. If, however, the co-operators took orders in the open market for boilers, locomotives, or machines, the result might be very different.

Then again, not a few people are of opinion that profit sharing will solve the problem, but I think labour will look with some suspicion upon this method. The fact is, men will hardly believe that capital will allow them to know all the profit which is made. Some may be inclined to think that the employer will take the lion's share first, and afterwards divide the remainder. Suppose there is a loss on the year's working, would the men care to have their wages reduced to make up the deficiency? I think not. It is exceedingly difficult to make a workman understand that you occasionally take work at a loss, or lose money on a particular work. They don't like to assert that you are romancing, but they receive your intimation with a smile of unbelief. To meet the wages difficulty, a better plan, in my opinion, would be to give workmen and officials a bonus of so much per cent. on the work turned out, without any reference to the question of profit or loss.

A circumstance may be here mentioned which might lead us to some conclusion as to the kind of leaven which will work the best. Not long since there was a trade dispute on the North-East Coast, the men who struck being the members of a Society which had several thousand pounds invested in the concern. That strike quickly terminated, because the leaven of self-interest had been at work and rapidly bridged over the difficulty.

Now, if it could be arranged that workmen might have shares allotted to them suitable to their means, this leaven of self-interest, as small capitalists, would work to prevent strikes, and even if one occurred it would not be prolonged to any extent.

If railway companies, for instance, would issue £10 shares to their employés, under certain conditions, the best of the men who save money would take them. These quiet and steady men would keep the discontented in order, and only when a real grievance occurred would they move or agitate in the matter. They would hold the shares, receive the interest like other shareholders, and be satisfied. Collieries and ironworks could give the same opportunities for investment by their best men.

Many manufacturers now give their officials an interest in the concern, and this tends to the advantage of the capitalist. Why not extend the privilege to the leading workers, and then men,

officials, and employers would all pull together for the common good, and the best results would be obtained.

It is all very well for speakers and writers to strive for the ideal, but, gentlemen, we have the real to contend with. Men have to be taken as they are, and not as they ought to be. There is the capitalist who firmly believes he is right in resisting any alteration of hours or wages, not because he wishes to grind his men down, but on account of the keen competition with which he is assailed. Again, a second employer would willingly grant concessions providing all employers paid the same rate of wages; and a third employer may have a speciality of work, and be able to give whatever his workpeople may ask for. On the opposite—the labour side—there are the leaders, who are ever on the alert, and who, when trade is good, quickly move for an advance of wages or less hours of working. And there are others who want similar concessions whether trade is good, bad, or indifferent.

Now the question occurs, In what manner and by what means can these antagonistic views be brought together for the good of the whole? My reply is, only by Boards of Conciliation, or District Trades Councils, composed of men representing capital and labour. In this respect there seems now to be a grand opportunity for one of our capitalists and employers to establish such a Board in the Manchester District, and thereby set an example to other districts—to get all the capitalists to unite together and select their representatives. Labour is already united, and could soon have their men ready. With the eight hours day looming in the distance, what an opportunity for Mr. W. Mather, M.P., one of our oldest honorary members, who is such a great authority, and who has drawn up rules and regulations for such a Board of Conciliation, or Trades Council.

And now, to revert especially to our own city, I must confess that I am under the impression that during the past 20 years Manchester has not made the same progress as—say Leeds or Glasgow. In the locomotive trade, for example, the last return issued Sept. 1892, indicates that the number of men employed in the Glasgow workshops is 5,511, while the number at present in Manchester is only 1,500. Why has this city, which 20 years since held the premier place in locomotive building, been relegated

to such a position? One can hardly believe it, because, as far as my memory serves me, no disputes or strikes have occurred to cause such a great difference. Practically, everything in that department of engineering has gone on smoothly. Certainly, there was the boiler makers' strike in 1878, but that did not apparently affect the local boiler makers. Fortunately, however, at the present time, consequent upon the boiler makers' wages being more uniform, Lancashire makers can hold their own with the Scotchmen in that department.

Anyhow, the fact remains that locomotive building has practically drifted away from this city, and stands as before mentioned, at the present day. In support of these remarks, the following quotation from "Engineering," December 30, 1892, may not be inappropriate :—

"The markets for locomotives during the year have been and are inactive, and those open to public competition have been practically only two, viz., Home and India. South Africa has also been gratifyingly prominent, but the field there is too restricted to affect the production to any appreciable extent. During the year South America has been a sealed book, and it is only by its being re-opened that an impetus may be looked for in our locomotive industry. The home market has been fairly active, and it is this fact that has saved the trade from collapse. India has bulked rather more largely than the home market, and still the State railways requirements are remarkable by their absence.

"During the year just closing about 400 engines have been given out in public tender, while the principal firms have a producing capacity of 1000 engines per annum. Of the 400 engines mentioned fully 85 per cent. have been secured by the Glasgow firms. Evidence has again been frequently given this year that the continental competition is an element that cannot be met by our home manufacturers. The fact must be recognised that the continental makers can manufacture more cheaply than ours, but whether the quality is as high-class is a matter of opinion."

In the tool trade, notwithstanding the ingenuity and good workmanship displayed by our machine tool makers, a considerable amount of work that 20 years ago came to Manchester has

found its way into Yorkshire. Locomotives, machine tools, and general engineering may be considered open work. They have no special patent or other advantage. They have been competed for in the open and gone to the cheapest market. What, therefore, has saved Manchester, and kept it in the not unenviable position which she even now occupies? The answer, to my mind, is found in the inventions of Whitworth, of the manufactures of Messrs. Gresham and Craven, of the gas engine by Messrs. Crossley Bros., and of the specialities of Messrs. Mather & Platt, the total number of men employed by these firms being, on an average, about 4,000.

The following figures have been obtained from the four principal trade unions in our line and they will confirm what I have said—as the Steam Engine Makers in 1871 had no members in Glasgow, whereas, in 1891 they have 85.

STEAM ENGINE MAKERS.

Glasgow	1871	none	1891	85		85·
Leeds	„	139	„	272		95·6
Manchester	„	184	„	372		102·

BOILER MAKERS.

Glasgow	1871	500	1891	1594		218·8
Leeds	„	106	„	219		98·1
Manchester	„	735	„	655	decr.	10·8

MOULDERS.

Leeds	1871	335	1891	584		74·3
Manchester	„	1042	„	1186		14·8

AMALGAMATED SOCIETY.

Glasgow	1871	1590	1891	2773		74·4
Leeds	„	1478	„	2217		50·
Manchester	„	3783	„	5189		37·

1891.—Hands employed in the Loco Trade.

Leeds	1999	Manchester	2171	Glasgow	6089

Now to enable us to divide or separate the producers from the non-producers I will read an extract from the Board of Trade Returns for 1891, giving the Exports:—

Extract of Exports from Board of Trade Returns, for 1891.

ANIMALS (Living).	
Horses	671,312
ARTICLES OF FOOD AND DRINK.	
Beer, Biscuits, Bread, Cheese, Butter, Fish, Hops, Vinegar, Pickles, Sauces, Confectionery, Provisions (including Meat), Salt, Spirits, and Sugar	10,699,290
RAW MATERIALS.	
Coal, Coke, Cinders, Fuel, and Wood	21,332,224
YARNS AND TEXTILE FABRICS.	
(Articles Manufactured and Partly Manufactured).	
Cotton yarn and twist, Piece goods, Lace, Hosiery, Thread, Jute yarn, Linen yarn, Silk, Woollen and Worsted yarns, Handkerchiefs, Scarfs, Shawls, Ribbons, Carpets, Blankets, and Cloth..	105,996,484
METALS AND ARTICLES.	
Manufactured therefrom (except Machinery.)	
Copper (wrought and unwrought), Mixed or Yellow Metals, Hardware and Cutlery, Pig Iron, Bar, Angle, Bolt and Rod Iron, Iron and Steel Wire, Hoops, Sheets, Boiler and Armour plates, Galvanized sheets, Tin plates and sheets, Cast and W. Iron, Steel (unwrought), Lead, Pig, Sheet, Piping, and Manufactures, Unwrought Tin, and Zinc	39,210,022
MACHINERY AND MILLWORK.	
Steam Engines and parts thereof and other description	15,817,515
APPAREL AND ARTICLES OF PERSONAL USE.	
Haberdashery and Millinery, Hats, Boots and Shoes, Umbrellas and Parasols, Apparel and Slops ..	11,331,470
CHEMICALS.	
Alkali, Bleaching Materials, Manure (Chemical), Medicines, comprising Drugs and Medicinal preparation	8,877,712
All other Articles either Manufactured or partly Manufactured.	
Fire arms (small) Gunpowder and all other kinds, Bags and Sacks for packing Merchandise, Books, Candles, Caoutchouc, Railway Carriages for Passengers and parts thereof, Railway Trucks, Waggons, &c., and parts thereof, Cement, Products of Coal (including Naptha, Paraffine, Paraffine oil and Petroleum), Cordage, Earthen and Chinaware, Red pottery and Brown stoneware, Furniture, Glass, Leather (wrought and unwrought), Oil, Oil and Floorcloths, Painters Colours and Material, Paper, Bags, Saddlery and Harness, Skins and Furs, Soap, Stationery (other than paper) ..	32,203,658
PARCELS POST	1,095,463
TOTAL ..	£247,235,150

From the foregoing particulars, I consider all those employed and the capital involved in those manufactures for export are the real producers, and these are the people who are most entitled to express an opinion on the question of wages and hours of labour, and whose interests are principally at stake. So that all railway employés are non-producers, and those employed in the shipbuilding trades, except on foreign orders—and they are not very large—are non-producers. On the Clyde, last year, 21 per cent. of the ships built were for abroad; on the North-East Coast 15 per cent., the average all round probably being about 20 per cent. Vessels of war for our own Navy protect the produce of the country, still the builders of them can only be classed as non-producers; so that, when you are able to separate the bees from the drones, it is wonderful how few producers there are, and what a large proportion of hands are required to assist them—the producers. Jeans, in his book on "England's Supremacy," gives 13,000,000 manual workers; of this quantity there will be about 5,000,000 producers out of a population of about 39,000,000.

For the year 1892 an extract is given below, taken from an article in the "Manchester Guardian," on the Iron and Steel Industries. The writer says:—

"If the exports of metals and manufactures therefrom, and of machinery, including millwork and engines of all kinds, are taken into account, it appears that the falling off during the last eleven months amounts to not less than £7,052,706. In 1891 the exports of these commodities amounted during the eleven months to £127,500,000. This year they have reached little more than £120,000,000. Not much change has occurred during the year in the prices of iron and steel, although the tendency has been rather downward. It must be observed, however, that in all markets, particularly those of Sheffield and the North of England, the force of competition has driven down prices to so low a level that producers, particularly those who are engaged in making iron and steel for railways, are accepting orders at or even considerably below the cost of production. There is no doubt a severe competition between English producers of railway iron and steel and those engaged in the same industry in Belgium and Germany. German producers are to some

extent shut out of foreign markets, because they have long maintained by combination artificially high prices at home. It is evident, however, from the foreign trade returns now before us that English manufacturers of iron and steel have to meet in neutral markets a competition from abroad which is both severe and strong; and if the forthcoming returns of the Board of Trade should show an increasing diminution of exports, they will afford much reason for consideration of the question why the exports of these commodities are continually falling off. English manufacturers of iron and steel say that coal is too dear, and possibly there may be some force in this opinion. Amongst the influences which have tended to lessen the demand for iron and steel must be reckoned that of the falling off in the orders for new ships. The shipbuilding yards in Scotland have been of late very scantily employed, and although those in the North and West of England, as well as in Ireland, are still fairly well engaged upon orders previously received, there is at the moment a distinct dearth of new engagements in all directions. This is an important consideration from a national point of view. The shipbuilding industry of this country is an exceedingly important one from many points of view. It takes off from the iron and steel works a very large amount of manufactured or partly manufactured material. Its productions are not shown in the statistics of trade with foreign countries, and yet they are to a very considerable extent sold to foreign buyers. At any rate it must be observed that the recently diminishing demand for new ships is an additional reason for regarding the home industry as rather declining than increasing."

Commencing with this year the Railway Companies have revised their rates for the carriage of goods, minerals, etc. Complaints are already being made of the increased charges, and we have now to pay 10 per cent. more for the carriage of locomotives and machinery from Manchester to Liverpool, but what can the Railway Companies do? They are forced to pay higher wages, to put on extra shifts of men, and to work others shorter hours, consequently they must have the money to pay for all this out of someone. It would not do to raise the fares for passengers and so the goods traffic must pay the penalty. Not long ago a large concern in Manchester, the capital of which amounted to

over a quarter of a million, had occasion to change its locality, removing to a seaport, thus inflicting a severe loss upon the town. This firm paid in wages about £1,800 per week, and their poor and other local rates amounted to over £1,200 per year in addition to other taxes. Their turnover amounted to about £200,000, over 5,000 tons of finished work being sent away by carrier and railway every year, this necessitating, of course, the supply of a large amount of raw material and coal, in order to produce the same. Under these circumstances it will be readily understood that this removal resulted in a severe loss to the Railway Companies and other non-producers, and it will plainly be seen that as trade moves from one district to another so does it move from one country to another, eventually settling in the cheapest market. To illustrate this contention I may quote another incident:—

Some time ago, a large steel works in Sheffield had a branch works a few miles out for making rails, and the competition in this commodity being so severe, the cost of carriage to the ship killed the trade. What was done? The Directors decided to move the rail making plant nearer to the ship in order to reduce the cost of carriage. This they did, with the result that the railmakers and steelworkers followed the plant, and the non-producers were left behind. The railway employés might complain of long hours, but their occupation was almost all gone, there being no rails to be carried and but few passengers. The building and other dependent or non-producing trades might agitate for shorter hours and more wages in vain, for their houses became empty; the bees that made the honey having gone leaving only the drones behind. Even the policeman was "out of a job" there being no rough and ready steelworker to require his attention, and the publican found to his cost that no other trade could "take their beer" like the steelworker.

To revert to our own branch of the engineering trade, it will be found that in 1891 we exported engines, machinery, and mill work to the amount of £15,817,515, this amount being much decreased for the year 1892. At the present moment, we have to contend with severe competition, and are unable to make the work pay at the present rate of wages for 53 hours per week.

This being the case what will be the result if our swaggering labour leaders so mix up politics and labour as to get an act passed to limit a day's work to 8 hours? In my opinion it will result in the loss of the greater part of our trade, works will have to be closed, and capital will move to those localities where it can be more profitably invested.

Mr. W. Mather, M.P., in the "Contemporary Review," on "Labour and the hours of labour," sums up this question in the following paragraph and subsequent 12 clauses:—

"In order to promote a wise and trusty exercise of this power, it is essential that reliable sources of information on the trade and commerce of all nations should be at the disposal of employers and workers alike. There should be established a Labour or Industrial Department of the Board of Trade, manned with an ample staff of well-qualified officials, to collect and distribute information, rapidly and in the most intelligible form, upon all questions affecting the conditions of labour in every variety of occupation or trade at home and abroad. Such information may be obtained with sufficient accuracy to place before organised bodies of labour in the country, as well as before employers and the public generally, the main facts and considerations which must guide us in our industrial progress. In a word, the function of this Labour Department would be to supply full information as to how the life of labour is lived, and how it may be improved from the point of view of human welfare as well as from that of industrial success."

1. That Trade Unions have become permanent institutions of the country, sanctioned by law, dealing with large funds which are the result of thrift and self-denial for the commonweal of their members; that they are continually increasing in numbers and influence; and that their members include the most thoughtful, steady, and skilled workers.

Remarks.—These are facts beyond question and they are very creditable to the Unions.

2. That the action of Trade Unions in the past, though sometimes passionate and for a time destructive, has contributed to the stability and improvement of labour, by causing large masses of men to act with one accord in the interests of their respective

trades, thus placing all employers on the same footing as regards hours and wages.

Remarks.—The latter part of this statement is wrong; they have not yet been able to place all employers on the same footing as to hours and wages. This is what the Manchester masters and men want arranging at the present time. Let the Scotch and Yorkshire wages be brought up to our level, then we shall have a fair chance in the competition for work. I have explained how the locomotive trade has drifted away from Manchester. In tools, recently, a customer wanted a 10in. Sliding and Screw Cutting Lathe with all other parts as usually sold, and this could not be obtained in Manchester under £84, the same kind of Lathe was, however, ultimately purchased in Yorkshire for £56. Why should there be this difference if hours and wages are equal in the Unions?

3. That while large concessions of time and great increase of wages have been gained for labour solely by the action of its combinations, yet the industries in which these advantages have been gained have enormously prospered, judging by the number of employers, the amount of capital invested, and the wealth realised in property.

Remarks—This gives labour and labour combinations the credit for all the progress that has been made, passing over the inventor, the capitalist and the speculator.

4. That the influence of Trade Unions far exceeds the bounds of their membership. For while they do not at present represent more than about 40 per cent. of the skilled adult workers in the country, they have virtually controlled and improved the rules and customs of labour among the unorganised workers, who have voluntarily acquiesced in the new regulations established by the Unions, sometimes immediately on their establishment, and sometimes after a lapse of a year or two.

5. That time—*i.e.*, the working hours—is the sole possession of labour, which it must lay out, as its capital, to the best advantage, so as to secure for itself the longest possible period of robust life; and that this can only be done by men combining to make rules affecting their working hours, which it is incumbent on all of them to observe and enforce, and which must accord with their common interests and their common employment—

with its peculiarities, dangers, hardships, and diseases, as well as with its advantages, and the conditions of its continued success and growth.

Remarks.—I cannot see that time is the sole possession of labour; I think it is equally as important to the capitalist, more in fact, for while labour is resting, rents, taxes and other costs go on as usual, and in the mechanical trades we ought to have good health and live to a good age, working 53 hours per week. As we leave work at noon on Saturday and commence work again Monday at 9 a.m., we have a rest of 45 hours every week-end, besides Bank, Christmas, New-Year, Easter, Whit-week holidays, and odd Saints' days. If any further reduction of hours takes place and the same quantity of work to be done we must increase the pace, and as the old proverb has it. "It is the pace that kills." It will have to be considered, therefore, if this is not detrimental to robust health.

Fitters, erectors, smiths, boiler-makers and others not working machines can put on an extra spurt, but what about the machinery? Machines are now running at the quickest possible speeds, the best steel has to be used for tools, and we keep them going every moment we can during working hours.

We have had medical testimony as to the effects on health of over-work, but I have not seen any statement as to the effects if a man works too little. I have known many hard working men who have been knocked-up, then had a good rest and quite well again. I have also known men who have worked less hours, lost a lot of time, and drifted into lazy ways, and could not be cured. The last state of this man was worse than the first.

6. That these combinations should be extended to all trades and occupations, as affording the safest means by which improvements may be made, evils remedied, and wants supplied, through the self-reliance, self-help, and determination of bodies of men with like needs and like aims.

7. That to such combinations of men may be safely entrusted by Parliament the prerogative of determining, by a majority of adult workers, what shall constitute a working day in their trades or occupations, thus making positive a power which labour

organisations have always rightfully assumed, but which in the past they have only been able to exert with great pains and difficulties, even when the object sought for and finally attained has been to the advantage of employers as well as employed.

8. That the scheme is comprehensive, and rests on a principle applicable to every trade and occupation; that it is adapted to meet the changes which time may bring in our industrial life; and that in passing such an Act as will accomplish this, Parliament can fairly meet the growing aspirations of the people without assuming control or incurring any responsibility beyond that of sanctioning and making legal a procedure which has long existed as a custom.

9. That spasmodic and sudden changes would be impossible, as the growth of opinion in any trade must precede the definite action of the Unions in that trade.

10. That a ready remedy for any evil effects that might result from mistaken action would be available in the hands of the workers, who would necessarily suffer much more acutely and quickly from such effects than employers; and that the responsibility attaching to the action of the Unions would temper the use of their power.

11. That the gradual diminution of hours in many trades that do not admit of a sudden drop to the ideal standard of forty eight hours per week, could be immediately commenced without dislocation and annoyance.

Remarks.—These clauses are very wordy, and might with advantage have been condensed into one clause indicating that labour should do all themselves instead of it being a joint affair for a Trades Council or Board of Conciliation.

12. That the political power of the working classes would not be diverted from its true purpose of promoting legislation for the good of the whole people.

Remarks.—As regards Clause 12, I admit that it is somewhat difficult to prevent the eight hours question from being mixed up with other political schemes, but it is really of such national import that I think partizanship should in no sense enter into its consideration. If, however, it has to be settled by the Legislature, all non-producers should vote against Parliamentary interference,

because it is most likely to operate to their disadvantage. Similarly, producers should give it their opposition because, as we have seen by the extracts from trade journals, England is already heavily handicapped in the competition for trade.

In the "Nineteenth Century," Mr. Jos. Chamberlain, M.P., in an article on this subject, sums up his principal suggestions for improving matters in the following eight points :—(1) Legislative enforcement of proposals for shortening the hours of work for miners and others engaged in dangerous and specially laborious employments ; (2) local enforcement of trade regulations for the earlier closing of shops; (3) establishment of tribunals of arbitration in trade disputes; (4) compensation for injuries received in the course of employment, and to widows and children in case of death, whenever such injuries or death are not caused by the fault of the person killed or injured; (6) limitation and control of pauper immigration; (7) increased powers and facilities to local authorities to make town improvements, and prepare for the better housing of the working classes; (8) power to local authorities to advance money and to afford facilities to the working classes to become the owners of their own dwellings.

Another politician, however, Mr. John Morley, M.P., is strongly opposed to Parliamentary interference with the hours of labour, and is, in fact, of opinion that it is better to leave well alone. By adopting such an attitude Mr. Morley clearly indicates the seriousness of attempting to tinker and experiment with the trades upon which the welfare of the nation depends. Recently, the question of working overtime has occupied a good deal of attention. Now I have known a good many men who are far from averse to overtime, on account of the extra money earned, and other reasons. The fact is, it is more money per week that is wanted by the men, and if trade is so good as to warrant a concession, let it be in higher wages. Thus any fortunate trade can afford to give the advance of wages without making others less fortunate discontented. When, however, the alterations are in hours, most of the trades want the benefits whether the state of trade is flourishing or the reverse.

Certainly, railway and Government establishments may do without overtime, but I do not think it can be avoided in contract

shops. Customers generally refrain from giving orders until work is absolutely wanted, and then it is difficult to keep all departments working neck and neck together. In my opinion there is more good than harm in it.

I think it is even better for the trade societies that a rush of trade should be worked down by overtime rather than night shifts, because as soon as the busy time is over all the night men are discharged and a large number thrown out of work; in the case of overtime it is simply stopped and there are still the same number of men working.

In conclusion, gentlemen, I think I have said enough for the present, and feel assured that you will give this subject your most careful consideration. From your own experience you will be able to decide on a course of action, so that in your dealings with Capital and Labour, in relation to our own business, you will do all you can to make the two great interests work profitably and amicably together.

VOTE OF THANKS.

Mr. T. Ashbury (past President) said the address which had just been delivered by Mr. Daniels, in which special reference was made to such an important economic question as capital and labour, was so full of interesting matter that they were almost tempted to break the rule which had existed for many years of not criticising the presidential address, and to discuss the subject. Many of them would doubtless have liked to have expressed their opinion on some of the points referred to, and he trusted that during the present year an opportunity might be afforded to the members of thoroughly discussing the question from the different aspects suggested by the President. He moved "That the best thanks of the Association be given to the President for his thoughtful and able address on the subject of Capital and Labour in reference to Engineering."

Mr. Alfred Saxon seconded the motion.

Mr. Ashbury put the motion to the meeting, and it was carried with acclamation.

The President acknowledged the compliment, and the proceedings concluded.

FELT HAT MANUFACTURE AND MACHINERY.

READ SATURDAY, FEBRUARY 25TH, 1893,

BY

Mr. J. MARSHALL,

OF HYDE,

MEMBER OF THE ASSOCIATION.

The object of the present paper is to bring under your notice the manufacture of Felt Hats, and Hatting Machinery. The purpose which I have in view is that of explaining the method of the manufacture of each branch of my subject. The subject itself is one which has not received much attention among mechanical engineers, with the inevitable result that, in a general sense, it is but little understood. Still the trade in felt hats, whether considered as a question of home consumption or one of export, is by no means an inconsiderable one, and its progress and present magnitude show an advance in quantity, coupled with a singularly corresponding decrease in the price per dozen, which I venture to think will be both striking and agreeable to those who recognise the inevitable cheapening of production which invariably follows mechanical invention.

It is desired to call attention to the series of advances which have been made, to refer to some of the men who have given the trade its present importance, and to detail in brief the development which has taken place from year to year. And further, to direct attention to the latest results which have been achieved in the direction of increasing the output and diminishing the cost. It will not be inappropriate first, to give a brief description of the crude and rule-of-thumb methods—if one may, without using a misnomer, employ the word method to anything which took place in hatting thirty or more years ago.

Before proceeding I will quote statistics which indicate the increased importance of the industry as an article of export. But first attention may be called to the important fact that, even as an article of home consumption, every-day experience shows

us how largely the felt hat has elbowed out of existence its unmanageable and comparatively inconvenient tall silk competitor.

The following table shows the quantities and gross values, as well as the prices per dozen of hats exported during the thirty years ending 1890. It will be seen that while our exports have increased six-fold during that period the average price of the article exported has fallen by about one-half in declared value. It is impossible to say, with certainty, how much of this very striking result is the direct outcome of improved methods of manufacture. It would probably be quite safe to estimate it at 50 % of the whole. But, as the raw materials used to-day are not quite identical in character and mixings with those of the former period, it would, perhaps, be unfair to credit the mechanical element with the whole of the difference :—

	Hats Exported. Dozens.	Declared value per dozen. Shillings.	Declared value total Hats Exported.
1862	225,471	35·90	£406,062
1863	240,511	36·90	444,126
1864	253,759	36·50	463,436
1865	250,895	36·90	483,594
1866	264,476	37·0	490,629
1867	271,868	37·0	510,031
1868	276,519	34·33	474,675
1869	329,409	31·05	511,472
1870	338,389	31·17	527,336
1871	452,153	29·58	668,681
1872	583,191	29·07	847,561
1873	597,543	29·46	880,787
1874	632,686	29·87	994,961
1875	757,686	27·60	1,045,440
1876	776,996	25·78	1,001,714
1877	887,537	24·81	1,106,556
1878	899,566	20·05	1,081,648
1879	779,493	23·03	897,657
1880	922,658	22·23	1,025,568
1881	1,025,931	21·90	1,123,380
1882	1,205,612	21·85	1,317,038
1883	1,057,826	21·50	1,137,086
1884	1,074,794	21·43	1,151,677
1885	1,041,849	21·34	1,111,546
1886	1,133,171	19·18	1,086,534
1887	1,194,638	19·08	1,139,449
1888	1,330,629	18·81	1,251,624
1889	1,359,772	19·53	1,327,553
1890	1,328,561	19·15	1,272,013

It is not a little surprising to know that so recently as some thirty-five years ago no mechanical appliance was in use for the formation of a felt hood or hat body. In place of something of the kind the operation was conducted by means of what was termed a bow and which might, not inaptly, be fairly compared to that primitive weapon of warfare. A long wooden shaft, the two ends of which were connected with a length of thick gut, occupied one hand of the operator, while the other was armed with a peg, by means of which, motion was imparted to the gut, which in turn was brought into contact with the raw wool or fur, and in this manner the material was thrown up light and into the shape and dimensions required for one-half the hat body. The other half was then made in the same manner. The hood thus formed by means of the bow and by hand labour, was, as already stated, in two pieces. The exact constitution of these component parts is a matter which deserves some attention. It is clear that some regard must have been paid to the thickness of the different parts of the two halves, otherwise, as they had to be joined together, it is obvious that a hat greatly varying in the thickness of its different parts must inevitably have been the final result. To obviate this the operator bowed the wool most thickly on to the middle of the hood. At the sides, and towards the crown, he tapered the material off to a thinner body. A brown paper section of a cone was then brought into requisition, and the two halves, having been placed respectively on its two sides, had their thick and thin parts manipulated and united in such a manner that they constituted one hood of tolerable uniformity in the matter of its average thickness. The operation was a slow one no doubt, still it sufficed for a time, and in the hands of good workmen its results may be described as satisfactory. Anyhow it was a system which lasted as long as hand labour ruled, and may, therefore, be regarded as the best system which the collective wisdom of its day had been able to devise.

Every subsequent process, such as planking or felting, blocking, curling, setting, finishing, &c., was conducted by a process equally analogous in point of crudity, and equally unscientific in the matter of method. In short, everything was

done by hand labour, one hat at a time. The buildings sacred to these operations were, to the full, quite as curious as the industry carried on within their walls. Generally they were attached to small farm-houses, or their adjoining cottages, and the occupants worked for small capitalists, who gave out the raw material which the operator worked at a rate of speed having a profound regard for his own personal leisure and convenience. The traditions of this state of things, and the logical results of those traditions, are still to be found in the somewhat unmanageable character of some of the labour employed in this industry even at the present time. For it has not yet been found possible to bring hatting labour—in the concrete—into that condition of organised control which is one of the chief characteristics of other industries, such as the cotton trade for example. The future will, not improbably, be fruitful of action in the direction I have indicated.

Comparatively however, hatting, as conducted to-day, presents itself under different and infinitely more satisfactory conditions than those last referred to. A modern shop most resembles a cotton mill in appearance, and such a place of moderate dimensions will pay considerably more money in weekly wages than is paid in a cotton factory of greatly larger size. The buildings are convenient, light, airy, and admirably adapted, in the main, to the economical distribution and manipulations of the work. They are chiefly of quite modern construction and possess every advantage over buildings converted from one use to another.

HATTING.

The subject really consists of two branches, viz., Fur Hatting and Wool Hatting, and, although the process of manufacture is in each case somewhat analogous, and sometimes even identical, the two branches are by no means capable of being described under one head. It is proposed, therefore, to divide the subject into two parts, taking the more delicate one of Fur first, and the comparatively rough one of Wool afterwards.

The foundation of this industry, the fur of which the hat is made, claims the first attention. There are many varieties

and qualities of fur used for this purpose. The best is that which is from the beaver, and the following come next in merit in the order in which they are here placed :—The Turkish hare, and Saxony hare, the Musk rat, the English hare, and Rabbits of various localities. But furs of widely differing value are taken from different parts of the same skin. The furs just enumerated are chiefly used for the special purpose of supplying the nap required by ladies hats. They are also extensively employed for mixing with other furs of inferior quality. Rabbits' fur, as may well be supposed from its abundance, is the sheet-anchor of the fur hat manufacturer. Rabbits' skins are sorted into first, second, and third qualities, and the value of the different furs they yield is determined in the following manner, viz :—

1st	Quality	from the	backs of	best selected	skins
2nd	,,	,,	,,	second	,,
3rd	,,	,,	,,	third	,,
4th	,,	,,	sides		
5th	,,	Clippings	from the	sides	
6th	,,	from the	tails		
7th	,,	,,	heads		

These different qualities of fur are mixed in proportions dependent upon the price of the finished article which is required, and may roughly be said to constitute the foundation of all fur hats which are made. The surface, in the case of a hat of apparently superfine quality is, as will be subsequently shown, manipulated by a process of some interest and importance by means of which other fur is super-added. Rabbits' fur being, as already indicated, the foundation of the hat, I have now the pleasure of exhibiting samples of its different qualtities.

Our first illustration is that of a machine called a Picker, Plate 1, and its function is to clear the fur from impurities. The fur is fed upon a travelling cloth which delivers it to the first-feed rollers, immediately behind which is a small roller covered with filleting, and running at a great speed. This divides the clumps of fibres, and at the same time blows them up into the chamber, where they fall upon another travelling cloth, and are conveyed to the next section, and so on until the

operation has been conducted six or eight times according to the number of sections of which the machine is composed. The net result of this process is shown in the fur sample numbered 1, which is really a mixture of different qualities of furs and which have first gone through this machine and subsequently run through the mixer. The material No. 2 is known as kemps extracted during this operation. No. 3 is known as dags and is extracted at the same time.

As a general rule manufacturers put the different qualities of fur through the picker separately. They are then stored separately, and the quantities of each which are requisite for the execution of an order are selected and put through the mixer together. By this means, economy in production is best secured, as it can be ascertained approximately beforehand, what weight of the raw material is required for the production of a given number of hats. And, as it can never be actually known that the precise mixture in hand will ever be wanted again, this is found to be the readiest and most effectual method of avoiding waste of fur by the manipulation of mixtures which are not likely to be required for some time. It is also found a ready means of checking carelessness on the part of the workmen.

Plate No. 2 is a Fur Mixer which performs the very important work of thoroughly mixing and assimilating the different kinds of fibres. This operation is of the utmost importance, because it is obvious that the finished hat, in order to be a sightly and a saleable article, must have perfect uniformity of surface. Upon passing through the feed rollers the fur is delivered to a card roller. From this it is then taken off by a brush roller and blown up into a box. Finally it drops, with the fibres completely separated and mixed upon a creeper cloth, which delivers it into a box, or skip, when it is ready for being operated upon by the fur former.

Plate No. 3 is the Fur Former. In its general principles it is largely a counterpart of the Mixer, consisting, as it does, of the card and brush rollers. The approximate weight of the fur requisite for the order in hand is ascertained beforehand. And this being determined the weight of each hat is fed through the former separately, and is finally blown through a

trunk. The sides of this trunk are fixed, and taper lengthwise. They are at an angle, vertically, which serves the purpose of adjusting the orifice or outlet, to the different shapes and sizes of the cones used in the formation of the fur hoods, or hat bodies. The cone itself, which is shown at the delivery end of the machine, is made of perforated copper and is placed upon a face-plate or turn-table. A powerful fan is connected to this turntable, the purpose of which is to hold the fur delivered upon the cone. The hood is then saturated by means of a spray, or dipped into a water vat; it is then carefully removed whilst another hood is being formed upon a duplicate cone, and thus the first formation of a fur hat is acquired.

Hardening, which forms our next operation is, on account of the tenderness of the texture involved, often done by women, whose softer hands are better adapted to the work than those of the sterner sex. The bodies are placed between cloths and rolled gently on a bench. It is, unhappily, a disagreeable fact that no machine has yet been invented which can cope with female labour in this department of the fur hatting industry. At some future period in the history of the trade we may perhaps hope for something which will give equal results, at less cost, than the present hand system. I mention this as a subject for reflection. We wait for the hour, and the man.

This operation of hardening is one which in some districts is wholly done by women, and the near future will, not improbably, see a considerable extension in this direction. At the present time some confusion exists in the trade on the point. The masculine mind has not been over willing, in one large district, to tolerate female labour in this department. Nor have the special arrangements necessary for the comfort and convenience of women been so amply provided as could have been wished. I am glad to say that the necessary sanitary and other accommodation is now an integral part of most modern hatting concerns, and women have a future before them in this industry presenting possibilities which will by no means be easily parallelled in any other suitable industrial activity.

A process known in the trade as Settling follows next after Hardening. Its object is to give to the hood that requisite degree

of consistency which will enable it to be handled and stretched. Plate 4 represents a machine made by Messrs. Oldham & Son of Denton. It is, in my opinion, the best thing extant for the purpose in view. It consists of three rollers, between which the bodies are rolled to and fro'. One of these rollers, which is made of copper, is heated by steam. This heat, combined with the pressure obtained from the top roller, has the effect of gradually settling, and rendering firm, the felt which the previous hand process produced.

The texture is now sufficiently firm to bear more drastic treatment with a view to what may be described as felting proper. Hitherto the size of the body has been absurdly out of proportion to that which is requisite as a head covering, and the immediate object in view is at once to produce felt by a reduction in the size of the hood. Plate No. 5 (Crank Bumper) shows the machine used for this purpose, and the object is accomplished by gently beating the bodies against each other continuously for some hours.

A further step in the same direction is taken when they are put through the Twisting Machine.

Plate No. 6 (Twisters). This ingenious and interesting machine consists of a barrel which contains four rollers. These rollers are fixed diagonally in the barrel. They are connected together with pinions, and an internal and an external wheel combined, and thus geared the rollers are driven. The hat bodies are being constantly put through, unwrapped, and re-wrapped in a different manner. This is continued until the bodies mill up to the required dimensions. It seems somewhat singular that with a choice of several milling or felting machines at their disposal, the general efficiency of which is admitted, some manufacturers have not yet adopted them. And there are still thousands of dozens of bodies of which the finishing process of felting is conducted on the old plan of alternately dipping in a solution of hot water and vitriol and hand-planking on a board. The bodies are next brushed clean, and for this work Messrs. Oldham and Son, of Denton, have invented and patented a machine (Plate 7—Brushing Machine) which admirably answers the purpose. This operation removes the loose fur and kemps which have worked to the surface during the process of

felting. The machine consists of two rollers covered with an indiarubber sleeve, and two brush rollers. The bodies are fed through, and effectually cleaned by the bristles. They are next stretched on a wood cone, called a "coning block." Afterwards an operation called "shaving" is conducted. This is the smoothing of the surface, and consists of placing each body on a wood cone attached to a vertical shaft. This runs at a great speed, during which the operator holds sandpaper to the surface, and the process is accomplished precisely as a wood-turner finishes his work.

The body is now ready for the proofing, or stiffening process. This again is a manual operation, and consists of immersion in a bath composed largely of shellac, with an admixture of other ingredients, the exact strength of which is, of course, wholely dependent upon the degree of stiffness which is sought to be imparted to the hat.

From the proof shop they are taken to the proofers stove, and subjected to upwards of 200° Fahr. of dry heat. This is for the purpose of drying the proof. Another process of heating, this time a moist one, follows. It is accomplished by placing the bodies in a box to which a service of steam is attached. The operation is termed steaming and its object is to drive the proof or stiffening, into the body of the fabric. It usually occupies about forty-five minutes, and is followed by again placing the bodies in the first stove for the purpose of thoroughly drying them. The proofed article is next taken to the dye-house to receive its requisite colour.

Up to this point the article has been allowed to retain what for brevity's sake I may be allowed to describe as its original "fool's-cap shape." It is, in short, purely conical and without the slightest pretensions to any known shape at all, and in the precise condition in which it left the copper cone former. Its condition, as a piece of felt, is supposed to be perfect. Should it be otherwise at this point, then all the labour expended upon its production has been thrown away. By a careless act on the part of one, or several of its manipulators, the article will not pass, but must be relegated to the "job" heap. This, of course, entails serious loss to the employer.

The body has now to receive its first operation in the direction of shaping by having its tip pulled out in the form of a crown. The body is next pulled on to an oval wood block, a piece of thick string is tightened round its bottom edge, and the surplus, or overhanging part of the fabric is pulled out, or flattened, at right angles to the block itself and thus is formed a rudimentary sort of brim. It has now, in an elementary form, some of the characteristics of the article which you recognise in commerce as a felt hat. This process, which is called blocking, is conducted by constantly dipping the body into boiling water in order to soften, and render pliable to the fingers, the stiffened body. Something in the way of a rough shape having being imparted the article is allowed to cool, the stiffening element re-asserts itself and the body settles down to the shape which it has been pulled into.

It has now to be got into such a shape as will render it a marketable article, and this involves two distinct operations, the body or upper part of the hat, being first dealt with, while the brim receives its artistic curl subsequently. This final shaping is done by means of hydraulic power.

Plate 8 (Hat Press). This plate represents the press used for this purpose. An oval India-rubber bag is brought into the inside of the hat, which has previously been softened in a gas-oven, and placed in a cast-iron dish. This dish is the exact shape and size which the hat is intended to assume. The dish itself has been ground and glazed so as to secure a perfect surface. And it is, of course, obvious that a separate dish is requisite for each different shape and size of hat made. The chest to which the press bag is attached in connection with the press is pulled down and secured by turning a three-winged catch into notches in upright slides which are firmly secured to the table, and the pressure is put on which produces the result previously referred to as pressing.

A shapely article having now been made, the hat is handed over to the finisher, by whom it is placed upon a finishing lathe. This machine is very simple in construction, and consists merely of a vertical shaft with a metal-face plate at the top. On this plate are two taper pegs, on which an oval hat block, made of wood, can be fixed. There are a pair of bevel friction bowls,

one of which is attached to a horizontal driving shaft and the other to the vertical shaft. They are put in and out of gear by means of a lever and cam, which lift the vertical shaft. For finishing purposes the hat is placed on the block last described, as attached to the face plate, and the block is set in motion. While rotating, the surface of the hat is first made perfect by the application of sandpaper. The finish proper is then imparted by means of a hot velvet pad, for the heating of which a small gas stove stands by. This process is termed "velouring," and it gives that bright and excellent finish which you have, no doubt, observed.

The brim next receives its first treatment, which consists of reducing its overgrown and ragged proportions to the actual width required. This is done by a small cutting machine, consisting of two revolving cutters in the form of washers chamfered off at the edges. These pare the brim off to the shape of a templet.

Much of the finishing of the brim, a process called "curling and setting," is still done by hand. There is a machine, however (Plate 9—Curling Press), which is well adapted for the purpose, the chief features and operations of which I shall now briefly describe. It greatly resembles the hat press, and is indeed, on the same general principle. The bag in this case is very nearly flat, as it is the brim only which is under treatment. The curling is done by having the chest of the press somewhat deeper, and the exact required form of curl made in cast-iron, and in halves. This arrangement is for the convenience of pulling the irons out of the felt brim which have been curled round them. Previous to the commencement of this operation of brim curling the brim alone is softened by being placed upon a "baker," an oblong cavity pan with a slightly rounded top which is kept hot by steam.

The finished hats are handed to the forewoman trimmer who distributes them in "pads," or batches, of a dozen or more, to the young women whose duty it is to trim them as fancy's latest fashion dictates. On being returned from this department they are taken in hand again by the finishers, at whose hands they receive a final touch of the velouring pad which effectively removes all the marks of handling left by the busy

fingers of the needlewomen. After inspection they are ready for packing for export or the home trade.

WOOL FELT HATS.

As intimated in an earlier portion of the paper Fur Hatting and Wool Hatting are in some senses analogous processes, and the subject at present under treatment only demands notice so far as its details are not quite similar to those operations already described. When the process of dyeing is reached every operation which follows is absolutely identical in the two cases. It is, therefore, only necessary to describe the manufacture of Wool Hats up to that process.

The wool most in demand for this purpose may be classed as follows:—

1st	Quality,	Port Phillip.
2nd	,,	Adelaide.
3rd	,,	Saxony.
4th	,,	Cape of Good Hope.

Wool hats, like fur hats, are made both hard and soft, and as a rule the soft hats only are made of the classes of wool enumerated above.

Hard hats are chiefly made out of the "noils," or short fibres, extracted from wool used in other industries, and great quantities of this material are imported from France. These short fibres felt readily, indeed the shorter and finer the fibres—provided they are not too short—the more easily they can be matted together as a general rule. The treatment of this material is first to extract the natural grease, but, as this is an operation not always conducted by hatters it may be dismissed with a passing notice.

Hatters may be said to commence their treatment of this exceedingly unpromising looking material by passing it through a willow for the purpose of opening it out. It is then carbonised, and this can be done by a choice of methods. The object in view is to destroy all the vegetable matter which clings to the wool, as the presence of any such matter is inimical to the future treatment of the material, especially in the important matters of felting and dyeing. It is either carbonised in its state as noils, or when formed into hoods and before the

dyeing process has been gone through. It is most important in this operation to see that no damage is sustained by the wool itself.

The cleansed wool is then carded and next taken to the forming card in front of which is placed the forming machine, Plate 10 (Wool Former).

As the web of wool is stripped by the comb from the doffer it is taken up by the forming cone which revolves upon four rolling cones. This machine also has an oscillating motion from left to right, and *vice versa*. By this means the wool, as it comes from the doffer, is always being crossed as it is delivered upon the double-cone. This crossing is essential for felting purposes. You will observe that two hoods are being formed at once. This double formation, when sufficient wool has been delivered for the dual purpose, is cut in two by the insertion of a pair of light shears in a recess which runs round the larger diameter. This operation of forming is always conducted by women, and their sensitiveness of touch enables them with almost unerring accuracy to determine when a sufficient weight of wool has been delivered on to the cone. At this point, it may be remarked that there is unquestionably a good remuneration for the inventor who brings out a good mechanical automatic method of forming these wool hoods the exact weight required.

The next process, that of hardening will, with this material, stand being done by machinery. There are two different methods of doing this, called respectively "cup and cone" and "flat" hardening.

Plate No. 11 represents a cup and cone hardener. This is by far the more scientific process of the two, as by it the cups and their cones can be made exactly to match the hood, with the result that the article is hardened in shape and exactly as it is made. The hoods are placed on one of the cones and covered with a cloth. Let it be noticed that the cone has a slow rotary movement. The cup is then placed upon the cone, and its quick reciprocating movement gives the first operation of felting.

Plate No. 12 is a flat hardener. This performs precisely the same function as our last machine. But in this case the felting

is performed by friction between two plates, and the tendency of its fridging action is slightly to alter the original shape of the hat body.

A second felting operation, called "settling," follows. This is done in a settling machine, such as the one made by Messrs. Oldham and Son, to which I have previously directed attention, but in this case wood rollers only are used. The hats are then subjected to treatment of a character so rough as to render it a matter of astonishment that they ever come forth in any other condition than that of rags. The huge pit of a tappit bumper (Plate 13), large enough to contain from 40 to 100 dozens of hoods, is filled, and the entire weight of two immense blocks or oakheads, is allowed to pound them for hours, sometimes for days together. This apparently rough usage, however, so effectually mills them up that their respective dimensions are pretty well reduced by it to the actual size required. The finishing touches are given by twisters, such as were referred to in the remarks on fur hats.

The remaining processes are conducted on precisely the same lines as those explained in the other branch of my subject.

FRAME HATS.

There is yet another class of felt hats, and they are called "framed" hats. They are made both of fur and wool. They are all of the kind which is, in the trade, called "soft." These hats are curled and blocked by means of wood frames and blocks. They are softened by steaming in the usual way; the brim is then tied round the shaped wood frame with a stout string. The block which makes the size is forced down into the hood by means of a screw, in connection with an iron frame made for the purpose, to the necessary depth. After cooling the block is removed, and the operations of brim paring, finishing, trimming, &c., take place precisely as described in other classes of goods.

VENEERING.

The mention made in an earlier portion of the paper of the latest development in hatting, had reference to the operation of veneering, and I now propose to give a description of that operation. The matter is, I think, one which cannot

fail to be interesting. You may in any event, safely accept my assurance that it has been, and in some sense still is, one of the most supremely interesting facts in the hatting trade to-day, from the circumstance that since its introduction upwards of £12,000 have been spent in litigation in the attempt to determine some of the facts of its ownership; and Vice-Chancellor Bristowe, assisted by an imposing array of legal gentlemen of the highest standing, spent time enough at the Manchester Assize Courts to find out something or other at least. I am happy to say that veneering is now going on very satisfactorily without legal assistance, and it is at least permissible for me to hope that it will continue to do so. If litigation can be shown to be an advantage to this or any other industrial process, it must, I think, be by means of some method of application which we have yet to discover.

Veneering consists of covering a wool or common fur hat body, which has been proofed or stiffened, with a veneer or surface coating of fur. And at the outset we are met with this curious fact, that the coating of veneer so put on for the purpose of increasing the sightliness and consequent market value of the hat, is composed of the very refuse of the fur trade. On account of the shortness of its fibre it was found unsuitable for felting, and was usually sold for manure, or otherwise got rid of at the least possible loss. This shortness of fibre is, however, no objection to its use for the purpose under notice. On the contrary it is shortened still more, and cut up and ground until in a condition almost like dust. A mixture of this material and hot water is prepared, and the hat bodies are put, along with the solution, into a revolving barrel, or any other machine in which the contents can be kept in constant agitation for a sufficient length of time for the hat surfaces to take up the requisite quantity of this mixture.

There are certain advantages connected with, or rather consequent upon veneering which must briefly be explained. I am, of course, speaking from the hat manufacturers' standpoint. One of the greatest puzzles in hatting is that connected with the fact that no attempt is made to impart colour to the hard hat until after it has been well stiffened. And not even the skill of the most experienced dyer can

suffice to drive the colour into the fabric to any appreciable extent. This can be seen by merely scraping the surface of a hat in this condition with the thumb nail, when the proof at once shows through the dye. Now, in the case of a veneered hat, covered as it is with a fine coating of fur which does not contain one atom of any stiffening element, the manufacturer has a surface of an exceedingly superior character to work upon, so far as the important question of dyeing is concerned. In short, the whole of the exposed surface is of a character in the highest degree receptive, and greatly superior in its future possibilities to a hat produced on the old lines. The initial importance of the process is, therefore, at once apparent. Its value at a subsequent stage, and in connection with the finished article, arises from the fact that a better looking hat can be produced, at a price, by means of this process than by any other means known in the trade to-day.

Plate No. 14 (Fibres of Fur and Wool). In order to make this question of dyeing in its connection with veneering perfectly clear to you, I have arranged a series of six illustrations showing proofed, unproofed, and dyed fibres, and appended their respective descriptions for your examination :—

No. 1.—Natural wool fibre, unproofed.

No. 2.—Wool fibre, showing proof on surface filling up the cells and rendering them dye-proof.

No. 3.—Fur fibre from surface of veneered felt, showing dye deposited in cells, the surface being bright and lustrous.

No. 4.—Wool fibre No. 2, with dye deposited on surface of proof.

No. 5.—Section of proofed and veneered body, showing unproofed surface.

No. 6.—Section of proofed body without veneer.

I have endeavoured, I hope not unsuccessfully, to place before you as briefly as possible the chief methods of hat manufacturing as conducted to-day. Still, my self-imposed task would be incomplete without a passing reference to the magnitude of this

industry, and to some of the reasons of its growth. Hatting has, like some other branches of our British manufacturing industries, characteristics of its own. Tradition affirms—and no doubt tradition is in this case quite correct—that a century ago a good "wrap-rascal" greatcoat was an institution which often descended from father to son as a family heirloom. But then the garment was guiltless of any admixture of shoddy in its fabric. In like manner a good beaver hat, in the first quarter of this century, was an article which a man probably purchased once in a lifetime. But its price was high, and the article was only used on special occasions. Its normal condition was that of being wrapped up in a silk kandkerchief and laid up in lavender in a drawer. This state of things arose chiefly from two causes. First, hats were dear, and secondly, money was not plentiful. Hats are now produced at a cheaper rate, and money is more plentiful so far as the many are concerned; and there is an objection—and a praiseworthy one—to wearing the shabby greasy hat. So, as the eminently respectable hat is now within everybody's reach, it happens that everbody wears it. But, unlike the 19s. 11d. overcoat, it is not shoddy, although it does, no doubt, exist in a great variety of qualities. In a large measure the mechanical improvements now at work in its production are the causes of its cheapness. I do not propose to enter upon the debatable ground of Free Trade and Fair Trade, but I may at least be allowed to call attention to the satisfactory fact that, while we practically import no hats, we do export them in large and ever increasing quantities. The trade has been left to the enterprise of employers and the industry of the workmen, with the result that England has far away the largest export trade in hats in the world; and that whereas in 1855 our exports of hats were so small in quantity and value as not to be thought worth classifying, except under the miscellaneous head of haberdashery, in 1891 those exports had risen to the satisfactory quantity of 1,142,869 dozens for the eleven months ending November, to the value of £1,098,022 sterling. This state of things I regard as extremely satisfactory.

The business is now carried on by men of means and enterprise. It has taken its place among the industries of the nineteenth century. Those who conduct it are alive to the

requirements of the hour. Indeed, there are no employers in any branch of manufacturing activity more keenly wide-awake on the important points of increased output and diminished cost, coupled with excellence of workmanship, than the men of whom I speak; and it is certain that the future will continue to see great strides made in every branch of mechanical invention which bears upon the production of this article of commerce. And of this I am certain, that the business offers splendid opportunities to the machinist who can solve some of the problems which occupy the thoughts of the hat manufacturers of to-day.

The extent to which assistance of a purely technical character is sought and obtained receives its most forcible exemplification in the fact that Professor Watson Smith, one of our most celebrated professors, devoted a good portion of a year to the study and exposition of the chemistry of hatting. And to-day the subject takes a prominent place in the Technical system of the City Guilds of the London Institute, to which the Provincial Technical Schools are affiliated. The prizes offered in this connection are valuable, and consist of Certificates, Medals, and Cash Prizes.

Probably the best method by means of which I can briefly bring your minds to grasp its importance as a local industry is in the fact that in the Manchester District there are upwards of 160 hat works, employing over 15,000 hands, with a producing power of some 65,000 dozens per week.

In conclusion, I should like to place on record my appreciation of the courtesy of the following firms, to each of which I am more or less deeply indebted for information and assistance in the preparation and treatment of my subject:—Messrs. Wild & Booth, Denton; Messrs. Heginbottom & Oldham, Denton; Mr. Lees Broadbent, C.C., Denton; Mr. Councillor Oldham, Hyde; Messrs. J. Moores & Son, Denton; Messrs. J. Cheetham & Sons, Hyde; Messrs. Jas. Hegginbottom & Sons, Hyde; Messrs. Mather and Hewitt, Hyde; Mr. Daniel Lever, Denton; Messrs. J. Woolfenden & Sons, Denton; Mr. J. Lees Buckley, Woodley; and the Lancashire Felt Co., Denton.

In order to make the paper all the more interesting Mr. Marshall exhibited samples of furs and wools and fur veneer, as well as specimens of hat bodies in different stages of manufacture. A practical hatter (Mr. T. Ogden) likewise attended, and demonstrated the old method of forming the hat bodies by means of the old bow.

DISCUSSION.

The PRESIDENT, (Mr. T. DANIELS), before inviting discussion, remarked that although the majority of those present did not understand much about hatting, they could see the advantages of the machines described over the old hand system. He thought the hat manufacturers should have medals and stripes, because they were able to keep foreign hats out of this country, and he hoped foreign hats never would be imported here.

Mr. JOSEPH NASMITH, after expressing his appreciation of the admirable manner in which the author had dealt with his subject, said the detailed explanation seemed to have one omission, and that was in reference to the exact nature of felting.

He might supplement, therefore, the information in the paper by saying that felting was only possible with animal fibres, because nearly all of them possessed a certain number of saw-like edges or depressions, which peculiar structure could be evidenced by viewing them through a microscope. Vegetable fibres could only be united by some form of twisting or plaiting, but animal fibres of all characters could be rendered into a homogeneous mass by the simple effect of pressure or rubbing. This was the basis of the milling process in woollen cloths, and of the felt process in hat making. The peculiar beauty and closeness of texture which beaver possessed, was entirely due to the same process which had been demonstrated that evening, namely, by the interlocking of the various fibres by means of the process or rubbing to which they were subjected.

Another point which the author might have made clear was the fact that in the formation of the hat bodies by machinery

the thickness of the various portions could be readily adjusted. If one part was required thicker than another, it could easily be effected by directing the current of fur more on one part than the other.

With regard to dyeing, it seemed a pity that a method could not be devised by which that operation could be effected prior instead of posterior to proofing, as at the best it was a surplus operation, and the reason why dyeing was so successful with veneered hats as compared with the ordinary hat body, was simply because the dye penetrated the various cells of which each respective fibre was composed. Since veneering had become the practice in felt hat making, a hat could be purchased at a small cost, equal in appearance to a most expensive production. Certainly, he admitted, the good appearance was merely superficial, but still the hat was good enough for all practical purposes; and when one called to mind the rapid discolouring of the hats made a few years ago, the importance of veneering would be appreciated. It was quite true that a large amount of money had been spent in litigation re this process, and it was a great question to him, if the expenses thus incurred would ever be repaid to the persons concerned. At any rate, the litigation put the science of veneering on a firm basis, and showed exactly what had been previously known, and what had been discovered since. Undoubtedly that litigation was brought about by a lack of shrewdness on the part of the inventor in not making an amicable working arrangement with those who infringed the patent. In this matter the aid of the microscope was brought in, and it showed some remarkable things. It was found that by the veneer process there was not only an apparent, but a very real union of the various fibres, and the small ground fur, of which samples had been shown, and which one would not consider had any fibre in it, in the strict sense of the term, did really contain, if not the whole at any rate the essential part of the fibres. When these were placed upon a previously prepared hat, a real skin was put upon the body which deserved the name of veneer, because the union was as perfect as in the case of furniture veneering, which they were aware, except from an accident rarely came off.

The author had told them that no felt hats were imported into this country, and that as far as export was concerned we had the lion's share in all the markets of the world. Generally, that statement was correct, but it was open to doubt, when the various delicate shades of felt hats were concerned. In this respect the German and the French had run us close indeed. Where delicate shades were required, and the skill of the dyer was necessary, then, as in the cognate industries of cotton and woollen, the Germans and French came to the front. It was a matter for congratulation that the authorities of Owens College, recognising this fact, engaged Mr. Smith to go into this subject, as he did by a series of lectures which he delivered to hatters. He demonstrated to them what was the basis of hat dyeing, and he (Mr. Nasmith) believed that series of lectures had done much to put the hat dyeing industry into a position of greater security than it had ever held before. In this connection it was a pleasing thing to know that the City and Guilds of London Institute (which was working with the money accumulated by the London Livery Companies) was turning that money to better uses than merely holding feasts, etc.

He thought that Institute, by reason of the funds placed at their disposal, had done more to advance the real practical technical education of the industries in this country than any other institution. It was indeed satisfactory to see that the funds which had accumulated from past generations, were now being devoted to the extension of the education of the people in the practical arts and industries that belonged to this country.

He had pleasure in moving "That the best thanks of the "members be given to Mr. J. Marshall for his instructive "paper, and also to Mr. T. Ogden for his ocular demons-"tration in the old method of hat forming."

Mr. A. Saxon seconded the resolution. He said that he had been well pleased with the paper and with the demonstrations of the old processes. Mr. Marshall seemed to picture hatting as a healthy industry, but his opinion was that some branches of the trade were unhealthy. He alluded to foreign machines being introduced into this country, and spoke of the enormous

waste there must be to the people in hats not being re-finished after having been worn for a time.

On the motion of the PRESIDENT, seconded by Mr. J. WALTHEW, it was unanimously resolved, "That the hearty thanks of the Manchester Association of Engineers be given to the gentlemen who had so cordially co-operated with Mr. J. Marshall in the preparation of the paper on Felt Hat Manufacture and Machinery."

Mr. JOSEPH MARSHALL, in replying, thanked the members for the very cordial manner in which they had received the paper, and also acknowledged, on their behalf, the vote of thanks which had been passed to those gentlemen who had in various ways assisted him. The latter, he might say, would greatly appreciate the compliment, which they undoubtedly deserved, as they had readily supplied him with any information and samples, etc., which were necessary for the completion of the paper. Respecting Mr. Nasmith's remarks, of course it would be difficult in a short paper to have referred to every detail on the subject, but he might point out that the information regarding the forming of the different thicknesses of hat bodies was contained on page 27.

He need only refer to two points in Mr. Saxon's remarks, the first being regarding foreign machinery. He could inform him that with the exception of one machine exported from America, called the "Eickemeyer Tip Stretcher," he was aware of no other. That was an excellent machine for its purpose, though it was not adaptable to all kinds of hats. He had had some experience in foreign-made machinery, but he thought as regards quality and efficiency they could not be compared with that manufactured in England. Again he might say that we made more hat machinery for abroad than for the home trade.

As regards the re-newing of old hats, that of course might be done, but the cost of same would be nearly as much as that for a new hat.

UNIV. OF CH.

FELT HAT MANUFACTURE AND MACHINERY.

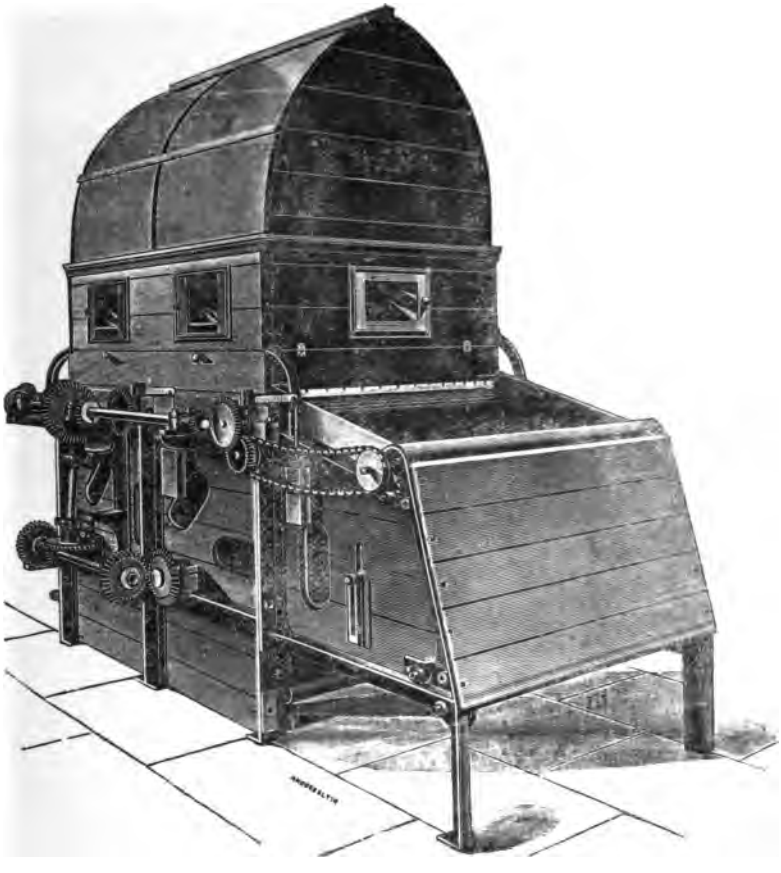

PICKING MACHINE.

UNIV

FELT HAT MANUFACTURE AND MACHINERY.

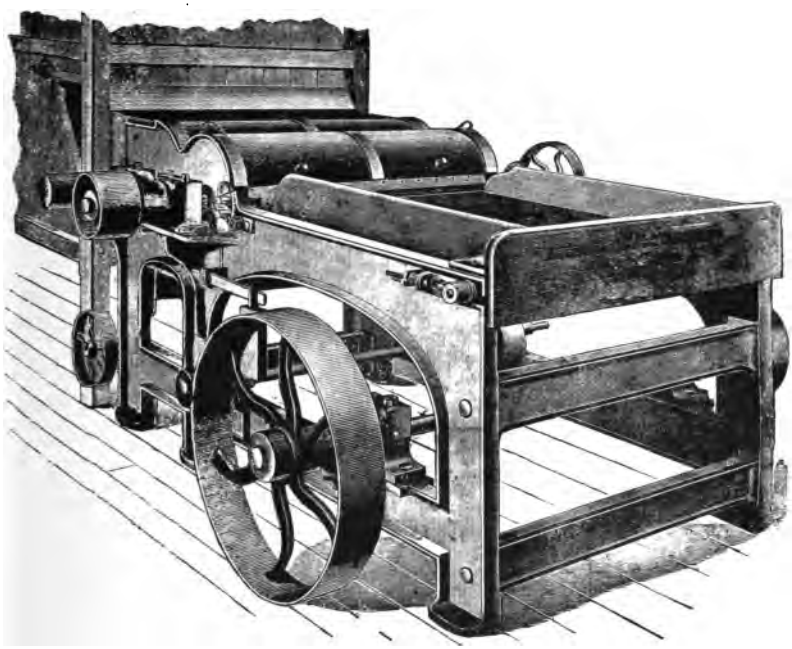

FUR MIXING MACHINE.

UNIV. OF MICH.

FELT HAT MANUFACTURE AND MACHINERY.

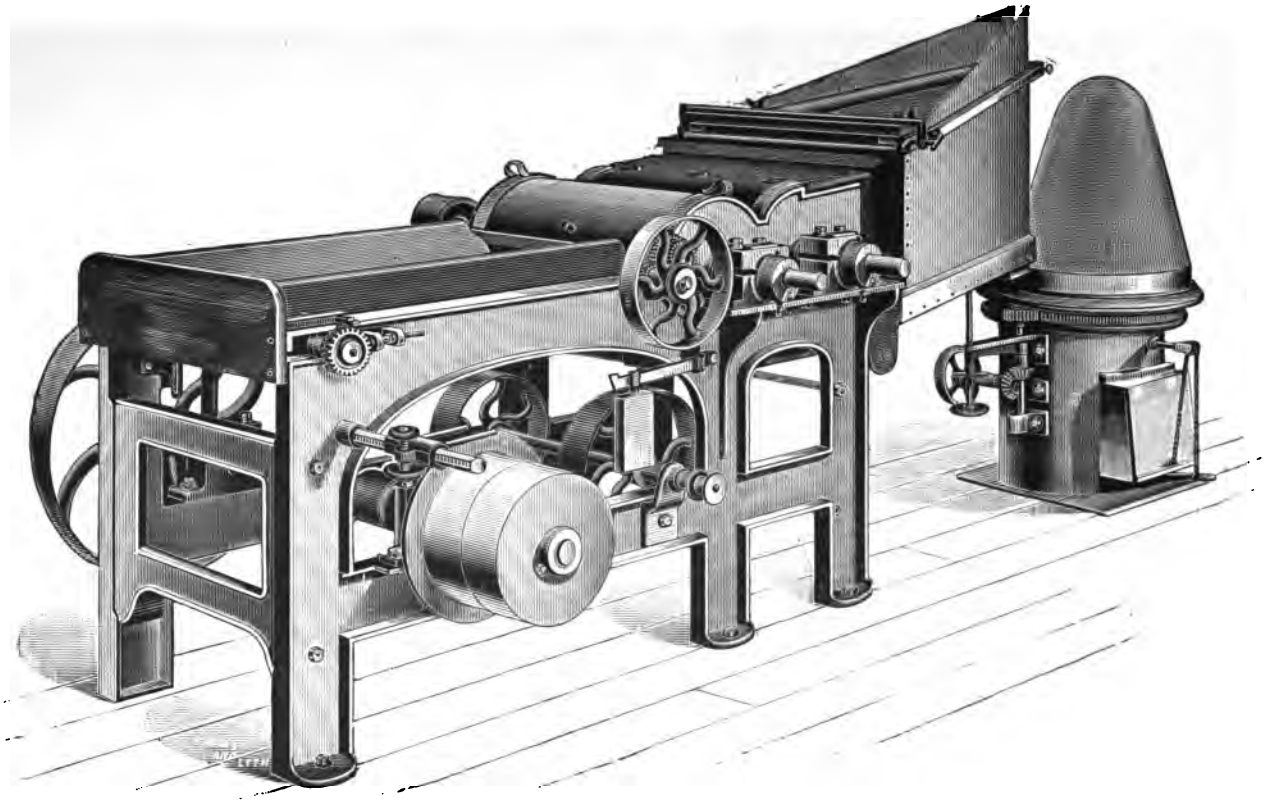

FUR FORMING MACHINE.

MANCHESTER ASSOCIATION OF ENGINEERS.

UNIV. OF MICH.

Felt Hat Manufacture and Machinery.

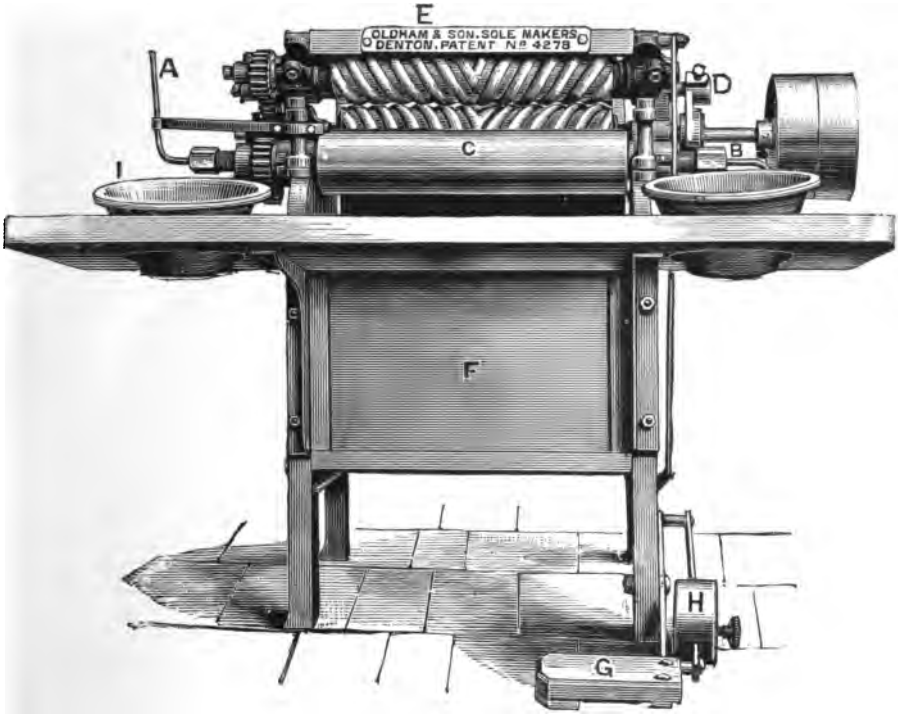

SETTLING MACHINE.

UNIV. OF MICH.

FELT HAT MANUFACTURE AND MACHINERY.

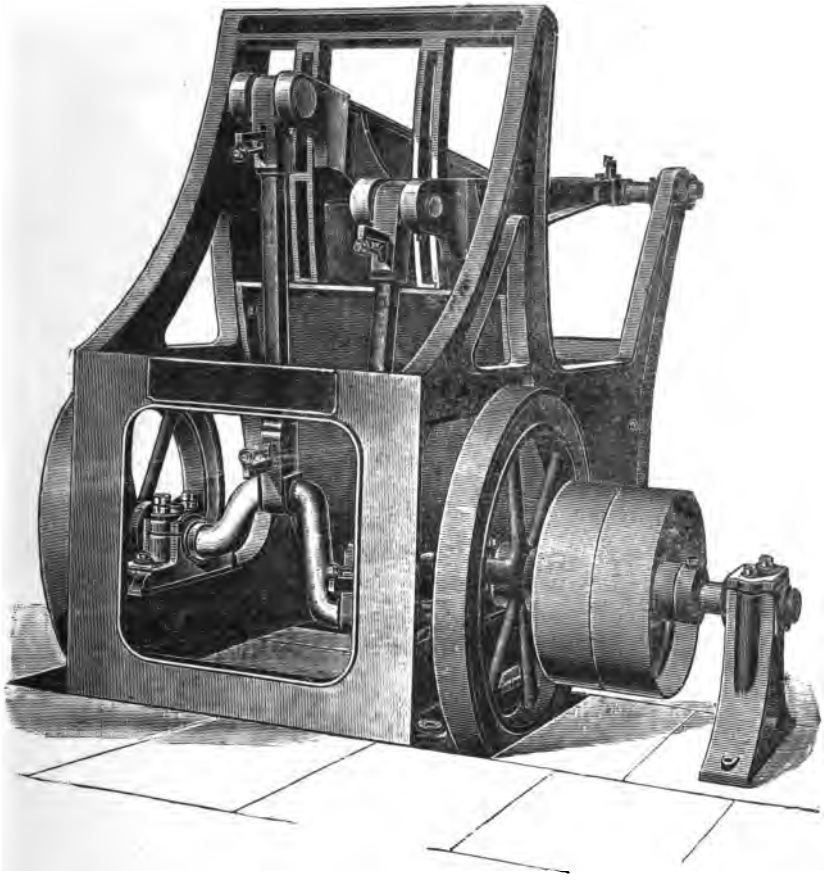

CRANK BUMPING MACHINE.

UNIV. OF MICH.

FELT HAT MANUFACTURE AND MACHINERY.

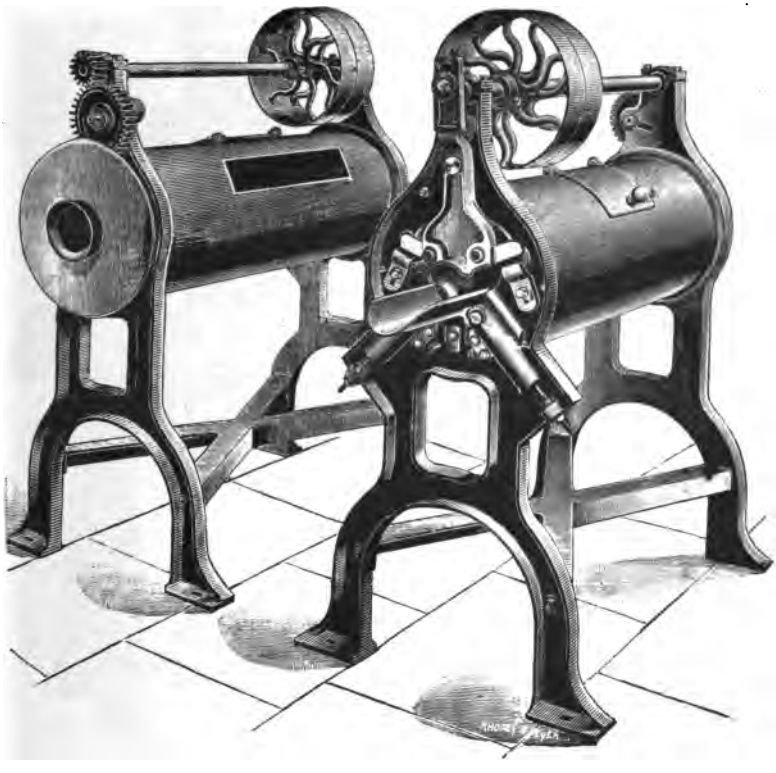

TWISTING MACHINE.

UNIV. OF CH.

FELT HAT MANUFACTURE AND MACHINERY.

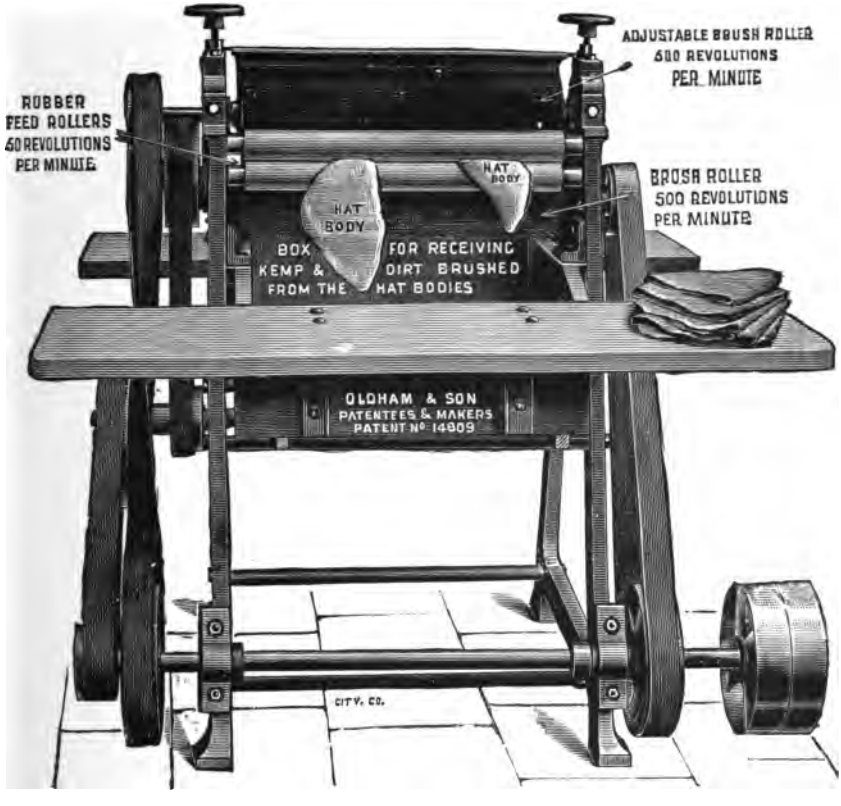

BRUSHING MACHINE.

UNIV. OF N.

FELT HAT MANUFACTURE AND MACHINERY.

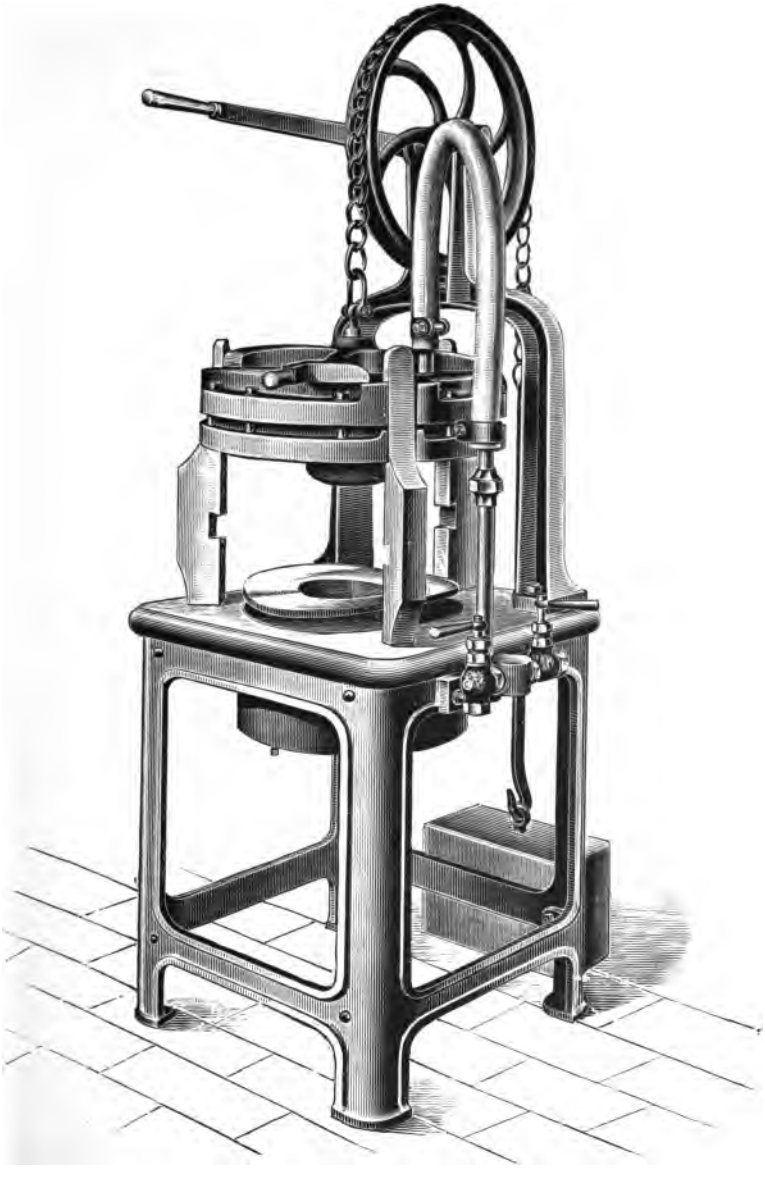

HAT PRESSING MACHINE.

UNIVERSITY OF MICHIGAN

FELT HAT MANUFACTURE AND MACHINERY.

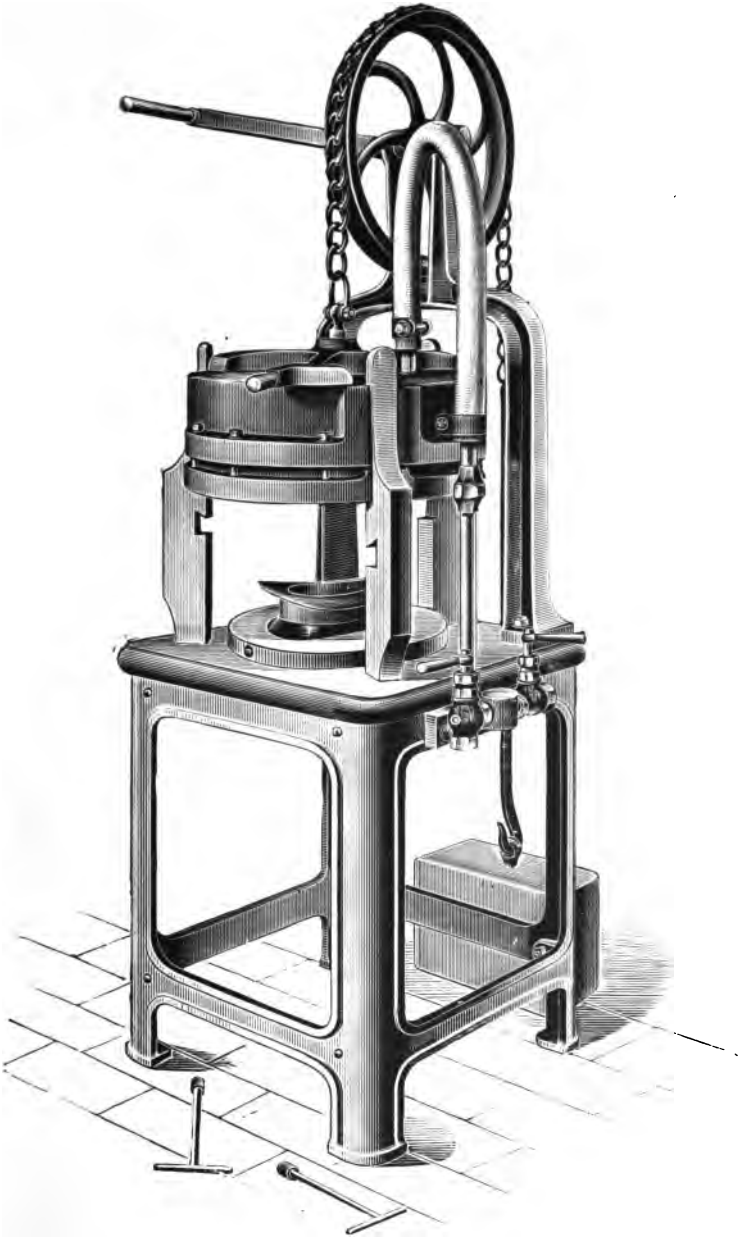

CURLING PRESS.

UNIV. OF MICH.

FELT HAT MANUFACTURE AND MACHINERY.

WOOL FORMING MACHINE.

UNIV. OF MICH.

Felt Hat Manufacture and Machinery.

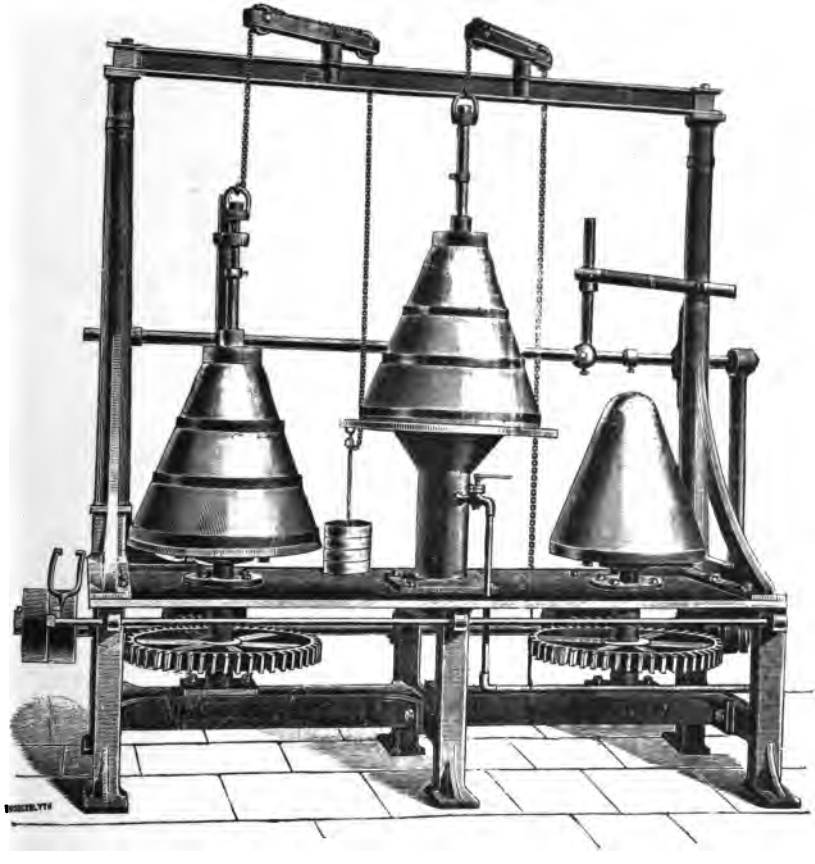

CUP AND CONE HARDENING MACHINE.

FELT HAT MANUFACTURE AND MACHINERY.

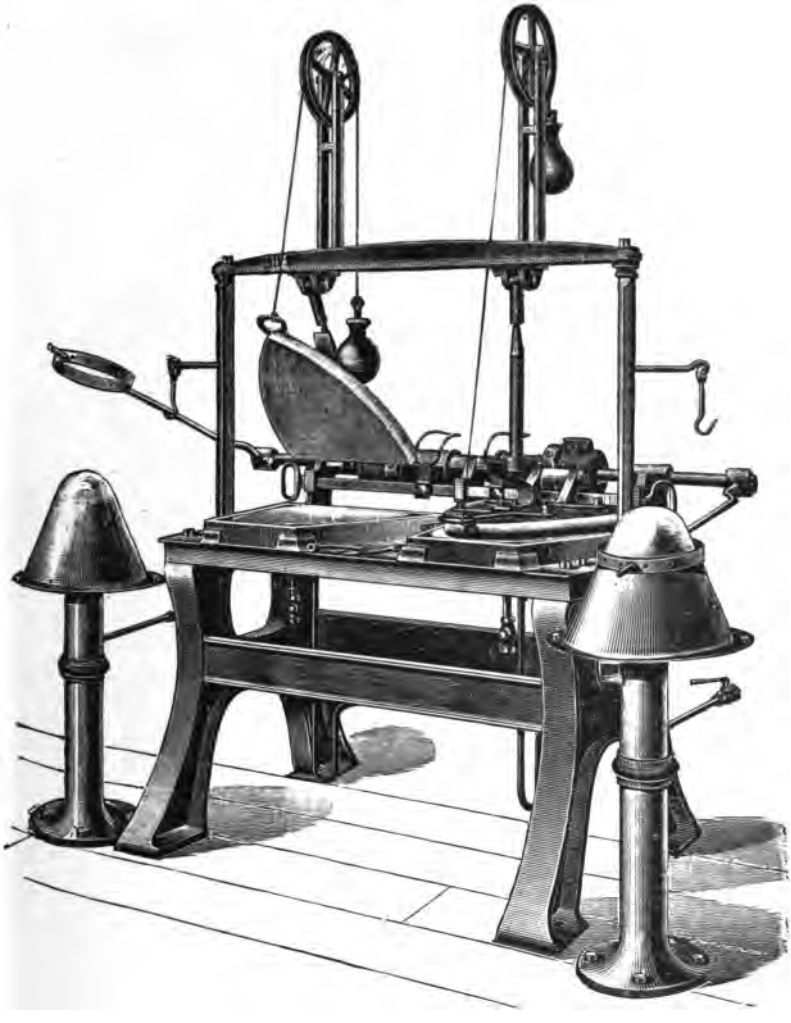

FLAT HARDENING MACHINE.

UNIV. OF MICH.

FELT HAT MANUFACTURE AND MACHINERY.

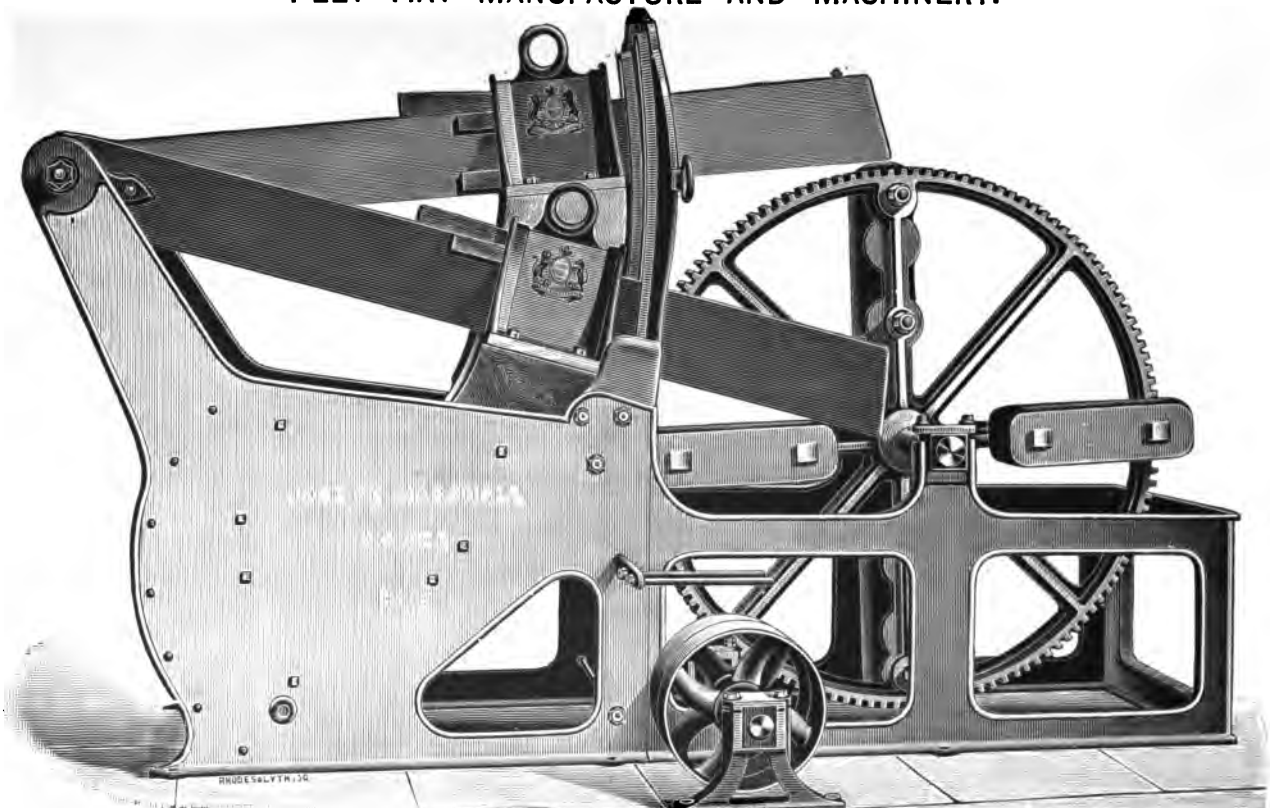

TAPPIT BUMPING MACHINE.

UNIV. OF MICH.

FELT HAT MANUFACTURE AND MACHINERY.

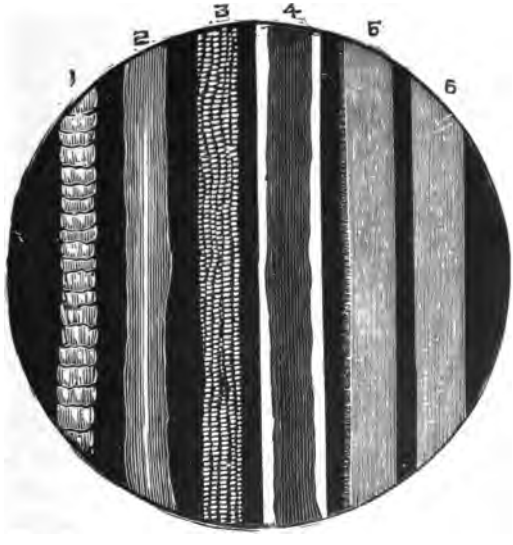

FUR AND WOOL FIBRES.

UNIV. OF MICH.

THE TRANSMISSION OF POWER BY COMPRESSED AIR.

READ SATURDAY, JANUARY 28TH, 1893,

BY

Mr. W. J. JENKINS,

Assoc. Mem. I.C.E., M. I. Mech. E.,

OF MANCHESTER.

MEMBER OF THE ASSOCIATION.

There is an ever increasing tendency in modern town life to make use of every possible means for reducing labour and cheapening the production of all those articles which go to make up the sum of the luxuries and necessities of our complex existence; and, as far as the mechanical progress of the times goes, there appears to be a decided tendency towards centralization. In Manchester, very rapid progress in this direction is now being made. For many years we have been content to get our water from what may be called a central station, and our gas from another; but now we are rapidly approaching the time when electricity and hydraulic power will both be obtainable from a central source. The benefits which might be made to accrue from this centralization of the production of modern necessities are many, but, while the possibilities are great, the need for careful management on the part of the authorities is also great. Too much reliance upon the municipal method of management will probably lead to future disappointment, especially when a large proportion of the more general wants of the public will be supplied directly by the local authorities.

The experience which has been gained during recent years in Hull, London, and other towns where high-pressure water has been distributed through wide areas from a central pumping station, proves that such a method of power distribution has supplied a want, and is more economical than what might, for

distinction, be named the individual system of supply. But while hydraulic power is admirably adapted for driving slow-moving mechanisms and hoisting gear, there is, nevertheless, a limit to its adaptability, and that limit is soon reached when loads are variable and speeds considerable.

Mr. E. B. Ellington, who is one of the staunchest advocates of the hydraulic system, as well as one of the most experienced engineers in its use, states that the efficiency of a slow-moving hydraulic machine, such as an hydraulic press with one gland or packing leather, will be about 90%, while a rapidly moving lift will not give more than 50% efficiency. Taking these efficiencies of the individual machines, and deducting the efficiencies of the engines and pumps at the central station and the efficiency of transmission through pipes, it will be seen that for every horse-power of work done by an ordinary lift, 2¼-HP will have to be indicated in the steam cylinders at the central station. It is clear, therefore, that the hydraulic system, though admirably adapted for the transmission of power to slow-moving, evenly loaded and intermittently working machinery, soon falls short of commercial possibility when speeds are higher, loads variable, and constant working desirable.

In order to cover the whole range of modern requirements, some other method suitable to these altered conditions is desirable.

It is to such a system that your attention will be directed for this evening, and afterwards I trust that you will agree with me, that for extreme handiness, universal suitability, and ultimate economy, few systems are equal to it.

In the face of the general impression that transmission of power by compressed air is extremely costly, it may be considered to be rather bold to make the assertion contained in the preceding sentence; but after an extensive acquaintance with the subject, and frequent investigation into the causes of the costliness of the system, I can say that a very large proportion of the compressed-air plants in England and abroad—particularly in England—have been put up under the fallacious idea that, because the system is thought to be an expensive one, therefore it is of no use to take the most ordinary care to design compressors better than those that have gone before.

Wherever you go you hear the same story: "Well, yes, we have a large plant, and there is no doubt of its safety, ease of manipulation, simplicity of the motors, and small wear and tear; but it is very costly in fuel, and wasteful."

An inspection of the compressors mostly accounts for the greater part of the complaining. You will frequently find the steam engine arranged so as to cut off at $\frac{7}{8}$ths of the stroke, because it is assumed that as the greatest resistance in the air cylinders occurs near the end of the stroke, therefore steam must be carried a long way in the steam cylinder to make up for it; yet you will find engines close at hand working against a constant load with a tenfold expansion.

It is curious to observe the fixity of ideas when once they have been formed, for in one case it never seems to strike the user that if his fly-wheel will equalise the fluctuating energy given out in the steam cylinder with a cut-off of $\frac{1}{10}$, it will also do the same with his air compressors. Then you will nearly always find the suction valves of the air cylinder too small for their work; and worse still, the delivery valves will be loaded with a spring to such an extent, and the area of outlet will be so restricted, that the air cannot get out of the cylinder fast enough, with the result that an excess resistance of 10, 20, and even 40lbs. per square inch is thrown upon the piston and wasted in heating and friction.

To use the words of a Continental writer it often happens that "Owing to the bad design of the compressors, three-fourths of the power to be transmitted is lost before the air enters the mains and before there can be any talk of transmission." It should not be a matter for wonder if, under such conditions, the ultimate efficiency of the system is low. But the compressors are not the only faulty parts of the apparatus, for the mains are generally far too small, and the motors are nearly always converted steam engines of the simplest and most wasteful type.

As the compressors are the first step in the series of machines used in a system of transmission of power by air, it would perhaps be best to direct attention to them first. The time we have to spare this evening will not permit of any kind of historical retrospect so I propose only to allude to the

machines of the past where they illustrate the improvements of the present time.

I might be permitted to say, however, that so far as the correct practice of air-compressing goes the subject was well understood as far back as the year 1830 when Thilorier received the medal of the French Academy of Sciences for his method of compressing gases by stages, and about the year 1849 the Baron von Rathen proposed the use of compressed air locomotives carrying air at 750 lbs. per square inch; and in order to obtain such high pressures he fully described the process of stage compression *with intermediate cooling* and pointed out the specific advantages of the cooling. As will be seen later on, the process of stage compression with cooling between the stages, with the application of the process to moderate pressures, has formed the great step in the recent improvements in air compressors.

Stage compression is of course an old idea when applied to high pressures, but its application to such moderate pressures as 60 and 90 lbs. per square inch in order to render possible the use of thorough intermediate cooling has formed a step almost as important as a new invention.

Modern Air Compressors may be divided broadly into two classes viz. :—

Class I.—Wet compressors or those using a water piston.

Class II.—Dry compressors or those using very little or no water in the cylinder.

Class I. may be sub-divided into three classes viz. :—

(*a*) Those designed by M. Sommeiller for the Mount Cenis Tunnel and depending upon the use of a natural head of water conducted alternately to chambers, which, by means of suitable valves, can be filled and emptied automatically, as shown in *Plate 1.

(*b*) Those which are the direct outcome of (*a*) but in which the power of an engine is used to create an artificial head of water by means of plungers working in barrels similar to water pumps.

(*c*) Those which are a step still nearer to the dry compressors, and in which the water is only used for cooling purposes and to fill up clearance spaces at the end of the stroke.

*For detailed description see page 100.

Type (*a*) is practically obsolete, on account of its slowness of action and consequently large size and cost. It will be understood that it would be next thing to impossible to stop such a large body of water with sufficient frequency to make quick strokes. The speed of the one used at the Mount Cenis Tunnel was about three strokes per minute.

Type (*b*). In this type the compressing force is got from a steam engine, and in order to retain the apparent advantages of the water piston, the steam engine drives plungers which displace a certain body of water and thus obtain what might be called an ebb and flow of the water in the compressing vessel. The speed of the plungers is about 160ft. per minute. Though not much adopted in England this is a type of compressor which is widely used on the continent.

Type (*c*). Is what might be called the modern kind of wet compressor and is a very great improvement over type (*b*) though both are due to the designs of the same engineers, viz., Dubois and François. Of course there are many intermediate stages between (*b*) and (*c*), but time does not permit of a longer pause on this part of the subject. The water used in type (*c*) has a totally different object from that used in (*a*) and (*b*), viz., it is injected under high pressure during the compression part of the stroke, and is sprayed into fine mist by means of nozzles so as to intimately mix with the air and absorb the heat due to compression. Only just sufficient to absorb the heat and to make up for loss due to the water carried away with the compressed air is injected.

The advantages of (*a*) are—the necessarily slow action of the water columns during compression gives considerable time for the heat of compression to pass through the walls of the vessel, and thus produces a near approach to isothermal compression.

The disadvantages are—large and costly machinery in proportion to the turn-out.

For all practical purposes air may be taken to be a perfect gas, obeying the usual gaseous laws, and capable of sustaining all practical pressures without condensation into a liquid.

If it is desirable for any purpose to increase the pressure of air from one degree of intensity to another, it can be done in two ways,—either by increasing the temperature of the air while the volume is kept constant, or by decreasing the volume while the temperature remains constant. An approximation to the latter process is the one almost universally adopted in air compressors. Suppose, then, that we have an ideal cylinder which is impervious to heat, and is fitted with an air-tight, frictionless piston, which can be made to force the whole of the air out of the cylinder at each stroke—in other words, suppose the piston to work without clearance spaces.

If the cylinder is fitted with an indicator and suction and delivery valves, the following actions will occur when the piston is drawn from one end of the stroke to the other;—First, air will be drawn into the suction end of the cylinder, until the piston reaches the end of the stroke. With perfect valves the line drawn by the indicator will be that of the lower pressure—say atmospheric. The piston now returns, the suction valves immediately close, and as the piston continues its motion the volume of the space containing the imprisoned air is constantly reduced, the pressure consequently increases. This goes on until a point is reached when the pressure inside the cylinder is equal to that above the delivery valve, after which the valve opens and delivery, at practically constant pressure, results until all the air is expelled and the piston is once more where it started from.

Now it is very important to make a clear distinction between the work done in compressing the air and that spent in delivering it into the reservoir. The work of compression is done at the point C on the ideal diagram (Plate 2, Fig. 1), after that point the work is spent in forcing the air out of, or delivering it from the cylinder. When the compression commences there is a volume—V_0 say—of air in the cylinder at atmospheric pressure and temperature, and if the temperature could be kept constant during the whole operation, the work done

in compressing and delivering the air would be a minimum for that temperature. But as soon as the piston begins to reduce the volume, heat begins to appear. This heat causes the temperature to rise, and consequently the pressure reaches that of the delivery at an earlier part of the stroke than it would if the heat could have been conducted away as fast as it was set free. If no heat whatever escaped into, or through, the walls of the cylinder, the curve would be called an adiabatic curve; while the curve in the other extreme case, where the whole of the heat passes away as quickly as it is developed, is called an isothermal one. The actual curve obtained in practical compressors lies between these two, but is generally much nearer the adiabatic than the isothermal. As far as the compression portion of the stroke goes, it makes very little difference which curve is followed, for the nett work spent in attaining the same final pressure is practically the same in both cases; but it is very important to keep as near the isothermal curve as possible, on account of the effect on the delivery portion of the stroke. This is clearly seen by superposing the two ideal diagrams (Plate 2, Fig. 1). C E is the isothermal curve for a certain volume of air, and F E the adiabatic for the same volume. The areas C I E C and F J E F are practically equal, but the delivery area, F D A H F, for the adiabatic compression is greater than that for the isothermal compression, C D A G C by the amount F C G H F, on account of the increased temperature and consequent greater volume of the air. If cases existed where the air could be used at its high temperature, the adiabatic method would be more economical on account of the smaller size of the plant for the same delivery; but it unfortunately happens in nearly all practical schemes for the transmission of power that the air passes through pipes, &c., at the atmospheric temperature, and the heat is almost immediately radiated, and the work represented by the area F C I J F becomes a dead loss. To reduce this loss to its lowest limits has been the object before every designer of air compressors.

Having so far described the ideal diagram we will now consider the modifications brought about by practical considerations such as clearance volume, resistance of valves and passages and insufficient area of delivery.

The diagram, Plate 3, Fig. 2, may be taken as a fair sample from the ordinary compressor, and shews clearly the many defects common to it. Assuming the piston to start from B we notice that the suction valves do not immediately open because the air compressed into the clearance space A B of the cylinder by the previous stroke of the piston expands behind the piston until a point C is reached, at which the pressure has become equal to that of the atmosphere. So far, therefore, the stroke is wasted, for no fresh air is admitted. As soon as the piston passes C the suction valves open and air is drawn in, but owing to the resistances of passages, or insufficient inlet area, the atmospheric pressure is not maintained and a difference of pressure seldom less than 1lb. per square inch and frequently much more, is required to keep up the supply as the piston moves. Even a resistance so small as 1lb. per square inch makes a very considerable waste of power when continued; and the power is absolutely wasted, for it generally happens that the atmospheric pressure is reached before the piston begins the return stroke owing to the slowing down of its velocity near the end of the stroke. The compression stroke now commences and heat is rapidly formed, resulting in a raising of the curve up to the adiabatic or very nearly so, and this in spite of the fact that the cylinder is generally provided with a water jacket, which is frequently supplied with water in such a manner as to prevent any considerable advantage being derived from its use. The cooling water should be delivered into the jacket near the bottom and close to the barrel of the cylinder so that a natural circulation may result. Very often however, the cold water is admitted at the top under the idea, that, being cold, it will sink through the warmer water already in the jacket; of course the latter is far in excess of the former, and so the cold water is quickly heated and does not accomplish the object for which it was admitted. When the pressure reaches the point D, the delivery valve opens and compression is complete, the remainder of the stroke being taken up in forcing the air into the receiver. By far the greater number of compressors are provided with ordinary pump valves, sometimes with springs above them, and sometimes without; but in either case the lift is always limited

to a very small amount on account of the hammering action of the valve in closing with the load upon the top. It frequently happens that even if the valve lifted until the opening round the edge was equal to the area of the pipe, there would not be sufficient space for proper delivery, for no defect is more common than contracted passages and limited areas. In consequence of this resistance, the pressure necessary to force the air out at the velocity with which the piston is moving is much greater than it ought to be and great waste of power and heating is the result. The writer has inspected diagrams from many kinds of compressors with automatic acting valves, some with ordinary drop valves without springs, some with springs, India-rubber valves closing on grids, metal discs and rings closing on numbers of small holes, flap valves with spring buffers, ball valves, and many others, and has come to the conclusion that if perfection is to be approached it must be by using some mechanical means for opening and closing the valves without shock, or at least for regulating the speed of closing.

Owing to the clearance spaces there is a considerable volume of high pressure air left in the cylinder at the end of the stroke, and this must be expanded down to atmospheric pressure before the suction valves will open. Of course it would easily be possible to make the clearance spaces so large that no air whatever would be delivered above a certain pressure—in fact cases of the kind are known to the writer—but in reasonable cases there is no actual loss of power by clearance spaces (though there is a great loss of volumetric efficiency), for the air expands behind the piston and helps the steam engine in its work.

Having now described the perfect indicator diagram and the very common but very defective one, it will be best to point out the various means that have been adopted to increase the efficiency of compressors and bring them nearer perfection.

The two defects which were formerly accounted most important were those due to heating and to clearance spaces, and it was thought that they could both be reduced by the introduction of water into the cylinders along with the air during the suction stroke, but it was soon found that water

introduced in this way had practically no effect as a cooling agent, though it might have been of some use as a means for reducing clearance spaces. There are, however, so many objections to the use of water in a cylinder, such as difficulties of lubrication, of keeping the water free from grit and of preventing damage from sudden shocks when the piston approaches the end of the stroke, that unless the water can be used more efficiently as a cooling agent its value as a remedy for clearance is not worth considering, against the disadvantages attending its use. With water introduced in this way it does not necessarily follow that there is any reduction of the effect of clearance space, because the tendency is to introduce more water than is absolutely required, and it often occurs that the clearance spaces are not only completely filled, but there is so much surplus water introduced that the volume available for drawing in air is no greater than it would have been if the clearance spaces had been allowed full action. The next step was to force the water in by means of a pump during the compression stroke, and while this had the effect of lowering the temperature of delivery, it was found that the work of compression was not materially reduced because the heat was not absorbed as it was generated, but was taken out mainly during the delivery portion of the stroke.

Professor Colladon discovered that unless the water was intimately mixed with the air in the form of fine spray it was useless to expect much cooling, so he arranged nozzles like that shown in Plate 3, in his cylinders so that water could be sprayed into fine mist and thoroughly mixed with the air during the compression stroke, and by this method a considerable saving can be effected.

The effect of introducing the water during the compression stroke, instead of during the suction stroke, is to completely do away with clearance spaces without running the risk of overdoing the work by sending in too much water. Compressors of this type—known as the Dubois-François—are very extensively used on the continent, though the dry compressor seems to suit English ideas better. The presence of water in cylinders is very objectionable when piston rings are used, for the tendency to rust and set the rings fast is very great, and

there is a cutting action caused by the water which soon spoils the internal surface of the cylinder. One other point in immediate connection with the wet method of compressing should be mentioned, and that is the fact that air thoroughly saturated with watery vapour takes slightly less power to compress it than dry air alone.

It is probable that up to this point of development both the wet compressor and the dry compressor were about equal as regards efficiency; for what the wet method gained by more thorough cooling, it probably lost by slower speed and reduced mechanical efficiency, and both of them suffered from the too common defect of too little valve area. On account of the convenience of the position, it seems to be a constant practice to place both the suction and delivery valves in the end covers of the cylinders, the top half usually being appropriated to the suction valves and the bottom half to those for delivery. Now, a very simple calculation will shew that if the suction resistance is to be anything less than 1lb. per square inch, the area of opening must be considerably more than can be got, with reasonable lift, in such a space on the cylinder end. In consequence of the restricted area the valves of themselves would take too great lift, and to limit the amount of it so as to prevent the valves from knocking themselves to pieces, heavy springs have been introduced, resulting in great loss of power in valve resistances. (See Plate 5.)

It should be borne in mind that 1lb. per square inch due to suction valve resistance often counts for more waste of power than 4lbs. per square inch of delivery valve resistance, because the suction resistance acts throughout the greater part of the stroke, while the delivery resistance is confined to a small amount near the end of it, and 1lb. per square inch on any ordinary sized piston mounts up to a very considerable figure in the course of a day.

But if contracted areas have been the rule with the suction valves, they have been much more so with those for delivery, and it is very remarkable that engines should work at all under such conditions. The cause would be clear if the trouble had sometimes been taken to calculate the velocity of the air during the first part of its exit from a cylinder through these valves.

No doubt this has been done at times, but when the result shewed that large valves would be necessary, those results have been ignored on account of the great trouble supposed to belong to the use of heavy valves.

There is a still more important defect with heavy valves, and that is during the opening, when the valve tends to go at the velocity of outflowing of the air, often as high as 200ft. per second at the commencement of the delivery stroke, when the piston is going fastest. Springs and buffers of all imaginable kinds are used to prevent the damage caused by the upward blow, but they all have the effect of tending to throttle the passages, and, so far as my experience goes, none of them are perfectly satisfactory. Perhaps the most satisfactory form of buffered automatic-acting valve is that of Messrs. Walker Bros., of Wigan, which is a large valve and closes quietly. Two forms of delivery valve are shown by Figs. 1 and 2, Plate 6, all suffering from the same defects in greater or less degrees, and Fig. 2, Plate 3, and Fig. 2, Plate 7, are actual copies of indicator diagrams from Figs. 1 and 2, Plate 6.

Note particularly the great proportional loss of power from insufficient valve area, and the effect of clearance spaces.

Having now arrived at the general defects of air compressors, let us see by what means they can be removed.

Firstly, let the abstraction of heat occupy our attention. It has been shown that mere contact of air with the surface of the cylinder, though the latter may be efficiently cooled by water outside, is not sufficient to abstract a very large proportion of the heat of compression. Taking the adiabatic curve for air to be expressed by the formula

$$P V^{1.406} = \text{a constant},$$

the writer has found that the actual curve obtained from compressors with jacket cooling only, and for ordinary air, which always contains a proportion of aqueous vapour, seldom comes below $P V^{1.3} =$ a constant. The introduction of water during the suction stroke has very little effect indeed, as might be expected when it is remembered that it would fall in a body to the bottom of the cylinder, and any cooling that could result afterwards would be due to conduction of heat downwards, a

condition under which water takes up heat very slowly. The method of spraying the water through nozzles during the compression stroke has already been described, and is the only effectual way of cooling in the cylinder. But there is a way which has been known since very early in this century, but which has only during recent years been applied to moderate pressure. That is the compression in stages with intermediate cooling. This is the only way which allows of complete cooling, and it is carried out in the following manner :—

The whole of the air is drawn into a low pressure cylinder, and is there compressed up to 20 or 30lbs. per square inch above the atmospheric pressure, the exact relationship between initial, intermediate and final pressures being given by the formula

$$P_1 = \sqrt{P_0 P_2}$$

where P_0 is the atmospheric pressure, P_1 that of the intermediate receiver and P_2 the final pressure—absolute pressures in all cases being used. On leaving the low pressure cylinder the air, which has become heated to a certain extent, passes into an intermediate receiver and is cooled down to its original temperature either by means of a spray of water, or by passing through tubes surrounded by cold water. The air then enters a smaller or high pressure cylinder in which the pressure is increased up to that desired. Diagram No. 2, Plate 2, is what may be called an ideal combined diagram from two such cylinders. Assuming that the cooling is done by a jacket only, the area E F D K E shows the best result that could usually be expected from a compressor doing the work in the usual way in one cylinder. When two cylinders are employed the compression curve follows the same line up to the point L, when delivery from the low pressure cylinder commences. The air then passes through the cooler, during which time its volume is reduced by the abstraction of heat until it reaches the isothermal line at M ; compression then takes place in the smaller cylinder and the curve follows the 1·3 line again until the delivery pressure is reached. The amount of saving due to the intermediate cooling is shewn by the area which has been cross-sectioned. But beyond this there is another important point to be noticed

and that is the influence of compounding on the clearances at the end of the stroke, supposing for the present that no means for reducing their effect is adopted. If the compression took place in one cylinder the effect of a 2% clearance in compressing to 5 atmos. absolute, would be to reduce the effective stroke about 8%, while a 2% clearance on the low pressure cylinder in which the absolute delivery pressure for the same final pressure would be 33·09lbs. per square inch, would be about 2·5%. That, gentlemen, is a very considerable gain, for it must not be overlooked that whatever air passes through the first cylinder must pass through the second whatever the clearance spaces in the latter may be. There would, of course, be a drawback if the high pressure clearance spaces were excessive, for then the intermediate receiver pressure would be higher than desirable, with the result that the power expanded in the low pressure cylinder would be greater than the most economical amount. As will be seen from the calculation in the appendix the formula

$$P_1 = \sqrt{P_0 P_2}$$

is made to satisfy the condition that the heat generated shall be a minimum, and that condition bears with it the further conditions:

1st—That the amount of heat generated in each cylinder is equal.

2nd—That the power expended in each cylinder is also equal.

As an illustration of the difference of temperature in the two cases of simple and compound compression, it might be interesting to remark that with dry air, and with jacket cooling, the final temperature with 73·5lbs. absolute pressure in the receiver would be

$$\frac{T}{T_0} = \left(\frac{P_1}{P_0}\right)^{\frac{n-1}{n}} \quad T = 521 \left(\frac{73{\cdot}5}{14{\cdot}7}\right)^{\frac{1{\cdot}3-1}{1{\cdot}3}} = 293^\circ \text{ F}$$

while with the compound compression it would be

$$T = 521 \left(\frac{P_1}{P_0}\right)^{{\cdot}23} = 175^\circ \text{ F}$$

$$T = 521 \left(\frac{P_2}{P_1}\right)^{{\cdot}23} = 175^\circ \text{ F.}$$

Probably the most important application of this principle is that which has been carried out in Paris, by Professor Riedler, on a very large scale. Every care is taken both with the valves and with the cooling arrangements, and the result is that the actual indicator diagrams of the air cylinders exceed the isothermal diagram by only 12 %, whereas the usual amount, even with first class compressors of the ordinary kind, is a waste of upwards of 40 %, that is to say the area of the actual diagram from the air cylinders is 40 % greater than the area which should be obtained if the compressors were perfect, and the compression isothermal. In the case of the Paris compressors the cooling is done by injection of water into the low pressure cylinder, after Colladon's method, then water is sprayed into the air during its travel through a plain cylindrical intermediate receiver, and in the high pressure cylinder again the same operation is performed. What this result means in such an installation as that at Paris, can easily be judged in the light of the following figures, which are taken from a short treatise by Professor Riedler, entitled "Neue Erfahrungen ueber die Kraftversorgung von Paris durch Druckluft."

The air is compressed to a gauge pressure of 6 atmospheres, = 88·2 lbs. per square inch, and the performance of the Dubois-François simple compressors was such that 300 cubic feet of air at atmospheric pressure and temperature could be delivered per hour into receivers, at 88·2lbs. pressure, for the expenditure of one indicated horse-power in the steam cylinders. The Riedler Compound Compressors delivered, under the same conditions, 367 cubic feet of air measured at atmospheric pressure and temperature—a result 22¼ % better for the same expenditure of fuel, &c.

The reduction of the effect of the clearance spaces can be carried out in a variety of ways, though the principle is the same. Supposing the piston to be nearly approaching the end of its stroke, there will be on one side of the piston air in the clearance spaces at the receiver pressure, while the other side of the piston will only have, at most, the atmospheric pressure. Now, if the suction valves could be closed immediately before the end of the stroke, and a connection be made for a

short time between the two sides of the piston, so that the high-pressure air in the clearance spaces could flow into the suction side and be expanded down until there was an equilibrium on both sides, it is clear that the pressure in the suction side would rise above that of the atmosphere in proportion to the volume of the clearance, and a large proportion of the air from the clearance spaces would be entrapped and delivered on the return stroke.

Various ways of arriving at such an end will suggest themselves, but perhaps the simplest is to cut or cast short grooves at each end of the cylinder, of such a length as to allow the air from the idle spaces to pass behind the piston rings from one side to the other of the piston. By such means, and with ordinary pressures, the actual delivery of air can be made to reach in daily practice 95% of the theoretical capacity of the pump, after the effect of the alteration of temperature has been allowed for, and the volume corrected to, say 60° F. Special stress should be laid upon the correction for temperature, because the results which can be produced by very bad compressors in getting up pressure in receivers are very startling until questions of increase of volume from high temperature receive due consideration.

Automatic or self-acting suction and delivery valves seem to have been the rule from earliest times, but mechanical difficulties, principally with delivery valves, convinced the writer some years ago that greater perfection was desirable, and a careful study of the problem led him to the conclusion that unless the valves could be governed at least during the closing period, a sufficiently large area of opening could not be attained. The outcome of this conclusion was a trial of an ordinary mushroom valve, opened by a cam, and prevented from closing too rapidly by the same cam. (See Plate 8.) This valve, though lifting fully one-quarter of the diameter of the seating, closes without the least noise and answers its purpose admirably. It will be understood that the valve is free to open of itself before the cam reaches the lifting lever, so as to suit lower pressures than the maximum. The delivery line of the indicator diagram can thus be made to coincide with the line of receiver pressure, and thus another

fruitful source of loss is overcome; while the results as regards durability will undoubtedly be good, owing to the quiet working of the valve.

Professor Riedler appears to have come to a similar conclusion as to the necessity for governing the action of the valves, for he provides means for manipulating both those for suction and those for delivery. His valves are provided with springs or other means for giving them a tendency to open, and when the proper time for closing has arrived, the mechanism closes them either by a direct action or by the application of a loading spring. Valve resistances are thus reduced to a minimum. (See Plate 9.)

Having so far dealt with the compressor, it might be well to speak of its efficiency before proceeding to the next part of the subject. This course has one particular thing to recommend it, and that is its similarity to the course pursued almost invariably by electricians when dealing with a similar subject. From repeated tests it is known that the mechanical efficiency of an air compressor seldom falls below 87 % after a few weeks working, and a two-stage compressor can be relied upon to give an efficiency of compression of at least 86 %; therefore, for every 100 I.HP developed in the steam cylinders, we can count upon getting the equivalent of

$$\frac{86 \times 87}{100} = 75 \text{ horse-power}$$

in the air when cooled to atmospheric temperature in the receiver. This is a reasonable working result with dry compressors. Better results have undoubtédly been reached in regular working, and better results still have been published, but it is very questionable if the latter could be produced if tests were made of reasonable duration by competent persons.

For instance, it has been claimed that the Straight-Line Air Compressor has a mechanical efficiency of 95 %, and that the loss due to heat has been found to be in certain cases as low as 3·6 %; but much depends upon the way in which the efficiency is calculated, and the number of indicator diagrams from which the average is taken. It is a significant fact that in almost all cases where it has been possible to measure the brake horse-power of a steam engine the efficiency has seldom

reached 90%, although 94 and 95% are becoming common figures, when the estimate is based upon friction diagrams.

Comparing the above efficiencies with those of the electrical method I think we may reasonably claim that the engine and shafting efficiencies will not be greatly different from 87%, while the commercial efficiency of a dynamo seldom exceeds 90%; the total efficiency therefore in this case will be this: that for every 100 HP indicated in the steam engine the corresponding electrical HP at the terminals of the dynamo will be

$$\frac{87 \times 90}{100} = 78{\cdot}3 \text{ horse-power,}$$

so that there is not a very material difference between the two systems so far.

True it is that such a comparison could not have been made some years ago, but it should not be forgotten that progress is being made in all directions, and those who are engaged in one branch of engineering should be careful, when making comparisons, not to take the most modern results in their own branch and compare them with ten-year old results in another. Ten years ago it would have been a remarkable circumstance if an efficiency of 50% could have been produced by an air compressor when measured in the manner just spoken of.

So far, then, we have dealt with the compressor, and have given considerable attention to it because of the vital effect it has upon the economy of the system.

The mains are the next subject for consideration and the cause of loss in them is two-fold. First there is the loss of air from escapes at joints and faulty places, or what might be called the loss from untightness. Second there is the loss from friction in the mains.

As regards the first item, it depends very much upon the care taken in making the joints, but there is a great unanimity of opinion among writers on the subject that this loss in ordinary cases is very small. The question of jointing the pipes is so important that it seems almost incredible that mains should be laid in the ground and covered for good, when it was known that small leaks existed in almost every length. Yet, if current rumours are true, such was the case in at least

one very important installation. Gas engineers are fully aware of the great importance of making their mains tight and of the saving which results from having sound work in them, but they experience considerable yearly loss on account of having to keep mains charged with gas throughout the year, while for seven or eight months of the year comparatively little gas is being supplied. Under such conditions it is easy to see that a very small leakage soon becomes a perceptible per centage of the volume supplied, whereas, if the mains were delivering the full capacity throughout the whole time the leakage would be a vanishing quantity. Breakages also occur often due to the too rigid nature of the joints, which do not allow the pipes to give when any settlement of the ground takes place. While the joint should be firm and tight, it should also possess considerable flexibility in any transverse direction, and the material used for making the joint should be yielding, yet not subject to deteriorate from contact with air.

Flanged joints for any but service connections should not be used, though they are the simplest and tightest form of joint; and the jointing material should not be indiarubber, unless of such a quality as to withstand the action of oil. The writer knows of several cases where great loss was experienced from leakage, owing to the rubber joint rings becoming softened by oil carried over with the air from the cylinders.

The joint which appears to have given the greatest satisfaction in large installations is of the kind shown at Fig. 1, Plate 7, the rings being made of rubber specially prepared to resist the action of oil. This joint has considerable flexibility, and is easily made. All pipes of large size should be made of wrought iron or steel, and not of cast iron, because of the danger of breakages.

The only considerable tests of the tightness of air mains are those carried out upon the Paris system, by Profs. Riedler and Gutermuth. They were able to test one length of 11·8 inch main 5·78 miles long, one length 10·66 miles long, and various shorter lengths, and their conclusion is that the leakage is very small. There were about 81 miles of mains laid at the time of the test. Taking average results from six tests of varying lengths, we find that there is a loss of about 4,100 cubic feet per mile

(taken at atmospheric volume) or equal to 0·38 % of the total hourly volume supplied. This volume is given as 1,065,000 cubic feet (reduced to atmospheric volume), but if that is so it seems reasonable to suppose that the main is supplied from both ends—the drawings appear to show this also—for if one main only supplied that volume the velocity would be over 61 feet per second, which is much too high for economy. Assuming therefore that the main is designed to carry half that quantity, we should arrive at the result that the loss from leakage would be 0·76 % per mile of the total carrying capacity of the main. The "load factor" of the installation is about 40 % I believe; that is to say the actual turnout for a year is 40 % of what it would be if the whole of the plant worked at its maximum for every hour in the year. Consequently the yearly loss due to leakages would be practically 2 % per mile.

With reasonable velocities—say up to 40 feet per second—of air through the mains the frictional loss is not great. It varies with the diameter of the main, the velocity of the flow and the co-efficient of friction, in the manner shown by the equation (due to Professor Unwin) in the appendix, and for a pipe one foot in diameter and a velocity of 40 feet per second, as a maximum, the loss of pressure in a five mile length would be about 25lbs., assuming the absolute initial pressure to be 100lbs. per square inch.

The final portion of our subject is that referring to the motors, and in dealing with it I cannot too firmly press upon you the importance of arranging these in such a way as to render possible the using of the air expansively. It has been the custom to use compressed air in the most expensive way, that is to say with practically no expansion. This custom arose from the well-known difficulty of the freezing up of the exhaust ports of the engine when considerable expansion was attempted, while with small grades of expansion such as that given with a cut-off at three-fourths of the stroke the difficulty was not great unless the weather was very cold and frosty. But if the compressed air is quite dry and is suddenly expanded from, say 100lbs. per square inch to atmospheric pressure, even by opening a valve in a pipe and blowing the air away into the atmosphere, quite sufficient cold is produced to cause freezing. In order

to make this clearer it will be necessary to consider the condition of the air before compression, during compression, and after expansion to atmospheric pressure.

Consider then, the state of 1lb. weight of air before compression, that is at the atmospheric pressure and temperature which we will assume to be 14·7lbs. per square inch, and 60° F. This air will occupy a volume of 13·09 cubic feet if dry, but if saturated with moisture the mixture will occupy 12·9 cubic feet. It is a similar mixture with which we always have to deal, though as a rule the air is not perfectly saturated, but contains sufficient aqueous vapour to make 12·95 cubic feet weigh 1lb. In other words each pound of the mixture consists of 6,948 grains of air and 52 grains of aqueous vapour. The law of saturation is this:—That the same weight of vapour saturates the same space (providing the temperature is constant) irrespective of the pressure, so that when compression takes place water would be deposited if an increase in temperature did not occur. Supposing the mixture to be compressed into one-seventh of the space it originally occupied, the amount of water which would be deposited during isothermal compression would be

$$52 \text{ grains} - \frac{5{\cdot}77 \times 12{\cdot}95}{7} = 41{\cdot}326 \text{ grains.}$$

But as the temperature is not constant during the compression, if any water is deposited near the commencement of the action it is rapidly re-absorbed as the temperature increases, for the weight of vapour which will saturate a space of one cubic foot at a temperature of 60° F. is 5·77 grains, whereas, if the temperature is 100° F. the weight of the vapour would be 19·48 grains.

Now the effect of the presence of vapour in the air under compression is to reduce the final temperature, because the specific heat of the vapour is about 0·478 or double that of the air which is 0·2377, hence the compression of saturated air is slightly more economical than that of dry air.

Assuming now that the pound of air mixture under observation has been delivered into the mains at the final temperature of compression, we shall notice that it immediately begins to

cool from radiation and conduction through the material of the pipes, and it quickly arrives at a temperature at which it will be saturated. As soon as this point is reached any further fall will be accompanied by a deposition of water in the pipes, and when the atmospheric temperature is again reached 41·326 grains of water will have been deposited.

It frequently happens that this water is not separated from the air, but is carried forward along the mains to the motors, and under the old system of using the air without re-heating it is the fruitful cause of freezing up of passages when the temperature falls owing to the performance of work. Before following the air in its action upon the motor it will be well to point out that the whole of the power spent in compressing it has been dissipated into the atmosphere in the form of heat as soon as the temperature of the compressed air in the mains has fallen to the temperature of the atmosphere; for the total energy contained in one pound of air is the same at all pressures if the temperature is the same; this is the reason why a fall of temperature takes place during expansion.

When the compressed air is admitted to the cylinder of the motor a certain portion of the stroke is performed at full pressure, and the work so done causes no fall in temperature, for it is not drawn from the energy in the air, but is done by the compressor much in the same way as if the air between it and the motor were a solid rod. Cut-off now takes place and any further work must be done by expansion of the air, and the equivalent heat-energy will be drawn from the air and the moisture mixed with it. The effect of the moisture will now be to retard the fall of temperature, in the first place because of the difference in specific heats of itself and the air; and, secondly, as soon as it commences to deposit in the form of water, from the latent heat necessary to hold it in the form of vapour. These actions have a very important effect upon the final exhaust temperature.

The whole trouble of freezing has often been overcome by spraying a considerable quantity of water into the cylinders of motors which run at a speed where water can be used with safety. But freezing also occurs in such machines as direct acting pumps working with compressed air and having

practically no cut-off at all. This is due to another cause of equal importance. Many books have been written in which the statement is made that if the air is used with practically no expansion there will be no trouble from freezing. Such a statement is quite untrue when applied to all sizes of machines.

The reason of the freezing is this. Take the case in which there is actually no expansion in the cylinder at all. When the exhaust port opens, the air inside and out will be at atmospheric temperature, but the air inside is at, say, 7 atmospheres pressure. Sudden expansion therefore occurs, and a great deal of work has to be done by the high pressure air in forcing the atmosphere back to make room for itself; the result is a considerable fall of temperature near the exhaust port, and if the size of the machine is considerable the temperature of the metal round the exhaust port will fall below the freezing point, and ice will form.

In such cases the maximum efficiency of the whole transmission does not exceed 30 %, while it is much more usual to find an efficiency of 12 to 15 %; and it is only in places where any form of heater would be dangerous, or where the amount of air required is very small, that such an arrangement should be used.

To render the system highly economical it is necessary to use expansion, and to do so carries with it the other condition that heat in one way or another must be added to the air before, or during expansion, to make up for the work being done and to keep the temperature above the freezing point after exhaust. Heating the air previous to admission to engines which do not use it expansively is also of great benefit, and acts in two ways. In the first place the increased temperature causes an increase in the volume of the pressure air in direct proportion to the absolute temperature before and after heating; and secondly, the heated air warms the cylinders and keeps them at such a temperature that efficient lubrication can be maintained. Without heating the oil freezes and does not achieve its object, and glycerine, which is mostly used as a substitute, does not appear to be a good lubricant at low temperatures.

With heated air there is, consequently, an increase in the mechanical efficiency of the motor amounting to from 10 to 15 %.

It is astonishing to witness the effect of heating air ever so little, say from 60° F. to 120° F., corresponding to an increase in volume from 1 to 1·11, or in the ratio of the absolute temperatures, = 520° : 580°. Supposing the motor to be fully loaded and running at the maximum speed it will attain under the load, the revolutions will immediately increase, and the machine will begin to run freely. An increase of 55 % in the volume of air supplied to a non-expansive motor can be made by heating the pressure air to 350° F., at which temperature there is no difficulty of lubrication; this corresponds to a saving of 33⅓ % in the air used. The exhaust in such a case would be hot.

Unless the heating could be done with a much smaller expenditure of fuel than would be possible with steam machinery, it would be quite out of the question to propose it. The conditions, however, are so much more favourable to the air plant that the heating becomes a very inexpensive and simple matter.

Air being a permanent gas, the whole of the heat applied to it is available for use again, because there is no change of state to be accomplished; whereas, with steam only a small percentage of the heat employed for its production can be drawn upon for work, the remainder being used up in changing the state from water into steam. On account of low temperature of the inlet air, the products of combustion can also be cooled lower than in a boiler, and the stoves can be arranged on the counter-current principle, so that very efficient heating results.

With good arrangements a quarter of a pound of coke burnt per hour per indicated horse-power is sufficient to heat the air required in a moderate sized expansive engine, and such a small matter as say 5lbs. of coke per hour for an engine indicating 20 HP is not of great consequence when it enables the efficiency of the whole system to reach 80 %. Even with an inlet temperature of 350° it is not always possible to work with a four-fold expansion in one cylinder, because of the low temperature of the exhaust; the heating is therefore preferably carried out in two stages by using a compound engine, wherein the air can be re-heated in the intermediate receiver, after passing through the first cylinder and before entering the last. The actual heating can be done in a variety of ways. For small

motors small cast-iron stoves are used, the body of which is formed of a double wall leaving an annular space through which the air can pass in a thin layer, while inside, a small coke fire is kept burning. For larger sizes perhaps the best form is the tubular coil of pipes, protected from the fiercest direct heat of the fire, yet surrounded by the products of combustion on their way to the chimney. A heater, 2ft. 6in. diameter by 5ft. high, is ample for supplying a pair of cylinders 13in. diameter by 18in. stroke, working with expansion but not compound. Coke is the most convenient and cleanest fuel to use. Other systems of heating can also be adopted, such as the placing of a lighted lamp in an enlargement of the main and allowing the products of combustion to be carried into the engine—this method is not suitable for any but continuous running machinery. Heating by passing a current of electricity through a resistance coil placed inside the pipe can also be done.

Finally we can take advantage of the laws of saturation in order to increase the efficiency of our motor, by supplying steam or aqueous vapour to take the place of that which we condensed out of the air by compression, and which will be required again to re-saturate the air when expanded. In this way we are enabled to gain great economy without complication.

Supposing that a small quantity of water is admitted to the air as it enters the heater, it will be turned to steam in the heater, and when expansion takes place in the engine the steam will give up heat to the air as required, until the whole of the steam is condensed into suspended moisture, though a great deal of it will be required to saturate the air when occupying the increased volume due to expansion. Very little water is required, on account of the considerable amount of heat set free when the steam condenses into water, thus giving up its latent heat. A regulated amount of water can be supplied by using a small tank with connections exactly similar to those of an ordinary drop-feed steam lubricator.

The whole of the apparatus connected with the motor is of the simplest kind, requiring little attention, and easy to replace;

the motor itself is as simple as the commonest steam engine, and even more long-suffering; if a joint gives out no one is scalded, and no damage is done; the engine can be started at a moment's notice under full load, and the skill required is of such an elementary character that any person who can turn a valve handle in the right direction has sufficient for the purpose.

In conclusion, gentlemen, I would point out the usefulness of this kind of power transmission for use in towns.

With it every house could be supplied with electric light by means of its own dynamo, driven by the air motor, which is always ready to start. All users of power could proceed with their business without causing any smoke nuisance, and the exhaust air would not only assist in ventilating rooms, but could also be used in the summer as a means for cooling them, and in the winter as a means of warming. Meat could be preserved by the cold-air method, while power would be generated for other purposes in other departments. It could be used by the largest as well as by the smallest concerns; for driving the factory or for turning a single sewing machine; for hairdressers' brushes or dental drills; for raising acids and cleaning carpets: for lifting the publican's beer, or blowing organs; for high or low speeds; for pneumatic despatch tubes and safety hoists, and for multitudes of uses which arise in everyday life. All these diverse deeds would be performed by a safe and cleanly servant without danger to life from its highest tension, with simple machinery of the everyday kind. In places where danger from fire might arise the air could be used cold, and all danger would cease. In fact, for its universal adaptability, great simplicity, and high efficiency, it has few, if any, equals.

The times in which we live are daily growing more exacting; wages increase; hours of labour diminish; the sky must not be fouled by smoke, and the safety of the individual is paramount. Yet if we must prosper in the race of life we must surpass competitors in lands not yet so thickly populated whose people are contented with scant luxuries and little leisure; and without we avail ourselves of every means to facilitate our object we shall fail in the race. The centralization of the supply of our primary necessities as a manufacturing

community seems to be the most urgent step at present, and when we have our water, gas, electricity and power all brought to hand and working together to form a harmonious band of helpers, we shall see the unsightly factory chimney disappear, the domestic chimney will no longer vomit smoke, and the blue heavens will again become visible as they were before the advent of that great personage the nineteenth century Engineer, who has done miraculous deeds, both in spoiling the face of the country and in improving the lives of the people.

DISCUSSION.

Mr. Alfred Saxon said the author seemed to think the cost of the system quite an indifferent question, but the first cost was a very important consideration. Whether they were to work it from a central station or not they must have a boiler and engines and complete compressing plant, and he thought the initial expense would operate against its general adoption. The system was no doubt a valuable one in certain cases, such as tunnel boring, but he would like the author to explain the failure of the Birmingham scheme.

Mr Gilbert Lewis remarked that the subject was one of great interest, and one to which more attention might be given by engineers. It was exceedingly strange, however, how little engineers were acquainted with the operations of compressed air, and if any but an expert were asked to make a machine what a rude contrivance was the result. In compressed air there was undoubtedly a value which was not possessed by water, though he was firmly of opinion that, like other systems of power transmission, its applicability was limited. A great difficulty in air transmission was waste, as it was not seen like water, felt like electricity, nor detected like an escape of gas, but it passed away through small pores to such an enormous extent that, so far, public attempts to make an efficient scheme had been

practically unsuccessful. Especially was this the case with the most modern, namely, the Birmingham scheme, designed and introduced by Mr. Sturgeon, to which he was surprised the author had not made more reference. In regard to this scheme it would be interesting to know the type of compressors adopted, the design of pipes used, and finally, to what principal cause the utter failure was due.

He might say that one of the first schemes introduced to the public was the pneumatic railway in London, but in that case leakage could not be prevented, and it came to grief. Air, however, was especially valuable when used in mines for working drilling machinery. He remembered some years ago designing a machine for getting coal. It was held by the man in his hands, and worked at the rate of 600 blows a minute, but unfortunately its effects on the man were unsatisfactory, and it had to be abandoned. The valves in that case were of a small cylindrical type and worked with an enormous velocity; they were so arranged that the reciprocating piston passed ports in connection with the valve chamber, and became a valve to the valve. He thought he might claim this machine as being the very first percussion drilling machine driven by steam or air power. The principle of its valves has also been applied to direct acting pumping engines and other machines. He, at one time, made an air compressor on the principle of the water compressor, and it was supplied to Messrs. Andrew Knowles and Sons. Unfortunately it was impossible to keep the water cool and it became quite hot, and with the difficulty of this being highly charged with vapour and the freezing of the exhaust of the pumping engines, the result was far from satisfactory. The means adopted to overcome the freezing were extraordinary. In one instance lime was put in and the air passed over it, which, to a certain extent, took up the water, but it was limited in its action, as eventually the lime became saturated; then, a long pipe was attached to the exhaust, but that practically throttled the latter. As far as he was concerned no successful result was ever arrived at in attempting to overcome the freezing of the exhaust air.

Mr. Alex. Rea remarked that he could not refrain from expressing his appreciation of the careful and interesting

manner in which the author had laid his subject before the Association. He was afraid that his friend, Mr. A. Saxon, had hardly grasped the subject from the point of view intended by the author. The latter's intention he thought was simply to bring into greater prominence the question of the utilization of compressed air, and to indicate that for certain mechanical purposes it was equally efficient and as applicable as electrical or hydraulic power. In no way, he imagined, could it be inferred from the author's remarks that compressed air was put forward as a substitute for steam.

In the transmission of power by water or compressed air, the question of friction in the pipes was an important factor, the co-efficient of friction being in proportion to the distance conveyed and the velocity. It ought to be borne in mind that it required a unit of force, acting on a unit of mass for a unit of time, to produce a unit of velocity. Velocity therefore meant loss of pressure; to minimise this the pipes for conveying should be of ample size; further, sharp curves or bends should be avoided. It was important also that all openings from main pipes where the direction of flow was changed, should have truncated openings, as all fluids, gases, &c., flowed easier in the direction of least resistance.

To get the greatest efficiency from water, air, &c., the pressure should not be spent in simply producing velocity in the main, which was a truism which only required mentioning.

He quite coincided with the author that as the subject of compressed air became better understood, it would prominently take its position as an efficient system for the transmission of power, and although there might be defects in its present arrangements there was sufficient mechanical ability in the engineering world to eventually overcome them.

Mr. R. J. H. Sayers expressed the opinion that the paper was a very valuable one and contained useful formula and hints for properly proportioning the important parts of an air compressor, and would be of great assistance to engineers when designing compressors and motors with the object of obtaining the most efficient results.

From his own experience of compressed air as a motive power for driving small motors and machinery, he stated that the economy was in favour of that system where the work required of the machines was intermittent, especially so when compared with belt and rope transmission, the driving friction and wear and tear being dispensed with; and should the air-driven machines frequently pause in working, there would be no power absorbed, but stored in the air receivers for use in the machines when required; in the case of belt and rope driven machines where the pauses are so frequent as to preclude the practice of throwing the belts out of action, some amount of power would be absorbed by them, and a consequent loss in economy. In cases where the machines travelled about in a similar manner to travelling cranes, or were situated for manufacturing reasons a great distance from the main source of power, the conveyance of compressed air in pipes to the motors offered distinct advantages over many other means of transmission of power, and the comparatively low pressures of compressed air against the general high pressures of hydraulic systems, was also an advantage where portable pipes were used, the weight of the pipes being lighter, and less attention required for maintaining the efficiency of the joints. Comparisons had been made by some of the speakers between the transmisssion of power by compressed air and large steam engines employed direct—as in mills and large works where the power used is fairly constant, enabling the engines to be worked at a small cost for fuel; it was well known that large engines of this type are far more economical than the average engines in small workshops, and therefore efficient air compressors at a central station would probably be able to supply power to small consumers to their advantage, if they adopted suitable motors, and heated the air immediately before use, as proposed by the author. He was aware that the author had made some interesting tests to verify his statements of the efficiency of compressed air when used for driving machinery peculiarly situated, as is the case in mines and places where steam and gas engines are not permissible, and a few figures indicating the results might be acceptable to the members.

Mr. Henry Webb remarked that the question practically before them was, which was the most desirable way of using the source of all power, coal, namely by hydraulics, electricity or compressed air. To his mind, the latter method was the most expensive, and he should be glad if the author could give them some idea of its commercial efficiency.

Mr. John West (Past President) said he had been studying the subject of compressed air for many years, and twelve years ago he introduced compressed air machinery for working the stoking machinery for drawing and charging gas retorts in the Manchester Corporation Gas Works. He might say that the first cost of the compressed air machine and the stoking apparatus combined adopted in the gas works was not so great as the hydraulic machine, and at the same time was more efficient. At that time, of course, the subject of compressed air was not so well understood as at the present day, the compressors and motors being now greatly improved.

The author had undoubtedly dealt with the subject in a thoroughly practical manner, but he did not think he intended to set up the steam engine against either the hydraulic or compressed air machinery. If a steam engine could be directly applied, of course the adoption of steam would be the most economical, but the results were not so satisfactory where the power had to be transmitted through long distances.

With special reference to the machinery for drawing and charging retorts, he might say that for this purpose he had used steam direct with boilers fixed on the machines, and had also transmitted the power by wire and cotton ropes. In the latter case some distance at each end of the house was required, and in many instances this necessity could not be obtained. He had also tried the gas engine, but latterly they had more frequently adopted the compressed air system. By this system they could carry the pipes about easily, and in fact, in a retort house say two or three hundred feet long it was simply necessary to lay a rail down the centre of the house, and the machinery would readily work from end to end of the house. In this case the application of compressed air was more economical than the hydraulic method, and at same time there was less wear and tear, which was an

important item. Under these conditions compressed air was very successful, and it was simply due to the fact that they were now working upon thoroughly scientific lines. As a proof of the economy in working these machines he wished to say that they had a plant at the South Metropolitan Gas Company's Works, London, consisting of 4 engines and coal breakers, and 8 drawing and charging machines, and one air compressor like the one shewn on the photograph before them; the fuel used in the boiler for working the whole of these machines was 3 yards or 25 cwt. of coke screenings per 12 hours, which is sold at 1/6 per yard. As regards the failure of the Birmingham scheme for supplying the public, he might tell them that even before it was started it was utterly condemned by foreign experts as being designed contrary to scientific experience. The compressors were badly designed, the leakage in the main was extraordinarily excessive and the results were as anticipated.

He was not alone in his advocacy of the adoption of compressed air where it was applicable as was evinced by a paper recently read before the Institution of Mechanical Engineers, by the Chief Engineer of Portsmouth dockyard, entitled "Description of the lifting and hauling appliances in Portsmouth Dockyard," where, in the most modern part of the docks they had about 2¾ miles of air pipes for working forty 7 ton capstans, five 20 ton cranes, and machinery for working seven caissons and numerous penstocks, &c., &c. There had been no case of a receiver bursting during the last two years. There was also less trouble with air joints than with steam and hydraulic joints. Experiments made at these docks shewed that the relative economical values of the air and hydraulic systems when applied to capstans, were as 13 to 11 respectively, while the great balance of convenience was also in favour of the former; in addition to which it was found that the wear and tear was much less in the air machinery than in the hydraulic, and moreover that the engines worked by air were less easily disarranged or put out of working order than those worked by water. Summing up the comparative advantages of hydraulic power, steam and compressed air, Mr. Corner says: "Comparing, however, the various advan-
"tages possessed by the hydraulic and pneumatic system, the
"dockyard experience is greatly in favour of the latter. For a

"number of machines working with a certain amount of regularity, "perhaps the hydraulic system would be the better as regards "economy, but with work like that in the dockyard, which "includes the use of a large number of machines spread about "at considerable distances from the source of power, and with "extreme variations in the demands made on the power, it is "found that the requirements are best and most economically "met by the compressed air system."

The subject was one indeed to which Englishmen had not devoted as much attention as the foreigner, and hence the latter were considerably more conversant with it, but it was to be hoped that now the ready applicability of compressed air was demonstrated, it would be more widely adopted in England.

The President (Mr. T. Daniels) asked if leather or lead answered the purpose for making joints? Again, if the ordinary cone face, similar to that adopted for steam, was as equally efficient as any other for the valve facing? Further, if the pipes, internally were subjected to much strain when the current of air was stopped. As regards the working of the valves, had they ever endeavoured to buffer them by the air itself?

Mr. John Taylor thought that the members could hardly fail to recognise that the author had rendered efficient services to them, by demonstrating in such an able and practical manner the facility with which compressed air could be adopted.

Mr. E. Marshall enquired as to the adaptability of compressed air for running trams?

Mr. T. Ashbury (Past President) said Mr. Marshall's query recalled the fact to his memory that some years ago he had the privilege of seeing in Glasgow a tram car tried to be worked by air, but it turned out to be an utter failure.

He should like the author to say if there was any possibility of trouble accruing by the leakage of air through the pores of the pipes, and if there was any limit to the pressure in that direction.

He had pleasure in moving "That the best thanks of the members be given to the author for his able and interesting paper."

The motion was seconded by Mr. A. Saxon and carried with acclamation.

Mr. E. G. CONSTANTINE in a communication said that the perusal of the paper had given him much pleasure, and he must congratulate the author on the masterly and comprehensive manner in which he had treated the whole subject, pointing out the defects and causes of loss in the compressors and engines and the remedies for them.

He confessed to having shared the common opinion that, although the use of compressed air had perhaps been the most suitable for some purposes, it would be best to avoid using this agent wherever possible on the ground of cost, but the author's paper threw so much light on the subject that he should not be of that opinion any longer.

He did not question the data given, but would ask the author whether the results he gave had been taken by himself from actual tests under ordinary working conditions, also by whom the improved compressors were made, and for what purposes the compressed air was used. It would also be very interesting to have the principal dimensions of the compressors and engines.

They were all aware of the disastrous ending of a large Compressed Air Scheme in one of our provincial towns, and any information as to the reasons of this failure would be instructive.

As most of the Members probably knew the Popp Compressed Air system of Paris had been working for some years, but whether it was a financial success as far as the shareholders were concerned he was unable to say.

In 1889 he had an opportunity of witnessing some of the uses which the air was put to, and was favourably impressed. At that time there were about 40 miles of mains laid, and the air was utilised to drive nearly 3,000 HP. It was supplied at the rate of 1¼ centimes per cubic metre (reduced to atmospheric pressure) or say 10d. per 2,350 cubic feet of air. The purposes for which it was utilised were exceedingly various, and included driving motors for working sewing machines and engines of 100 HP; driving pneumatic clocks;

shifting wine from one cask to another; raising water to the tops of houses; emptying cess-pools; ringing pneumatic bells; blowing whistles; ventilating and cooling rooms; working lifts, shearing metals and many other purposes.

Compressed air was also used on a large scale at the great steel works at Terni in Italy, where 1,500 HP was used in compressing the air which was required for working cranes and other machines, including a 100-ton hammer.

There was no doubt a large opening for the use of compressed air when it was once understood that this agent could be produced and used economically, for it certainly possessed important advantages in cleanliness, safety, &c.

He should like to place on record his thanks to the author for so ably introducing and treating this subject, which was one on which reliable information as to results in our own country had been somewhat difficult to obtain.

Mr. William Carter in a Communication said in regard to the statement in the paper that Hydraulic power was not suitable for high speeds, he thought it might be of interest to the meeting to know that his *Company had recently fixed in London, on the mains of The Hydraulic Power Company, two high speed "Pelton" Motors, which were running at 1,660 revolutions per minute; one was driving a dynamo, and the other a centrifugal ore separator. These two motors were 18in. in diameter, and would give off 10 HP effective. A 12in. motor with water at 700lbs. per square inch will run at 2,480 revolutions per minute and a 24in. at 1,240 revolutions. As these motors had a high efficiency they were very economical.

From the foregoing facts he thought it would be evident that hydraulic power was capable of driving machinery running at the highest speeds.

Mr. John Sturgeon, Chief Engineer of the Birmingham Compressed Air Power Co., in response to the author's request, submitted the following communication:—

"I am glad of the opportunity of saying a few words as to the cause of the breakdown of the Birmingham Compressed Air Power undertaking, as to which, I understand, some remarks

* The Hydraulic Engineering Company, Chester.

were made during the discussion, report of which I have not seen.

In the first place, the Birmingham work was undertaken with insufficient capital. A large sum was expended in legal, parliamentary, and promoting expenses. The cost of land, railway siding, retaining walls, and other necessary preliminary outlay also absorbed a considerable sum, and the working plant had to be limited to half the amount with which it had been intended to make a start. What I may term the *dead* capital outlay consequently bore double the proportion to the earning power of the working plant that it should have done. This shortness of capital also prevented the directors from extending the air mains into the most profitable districts. Thus instead of starting with 6,000 HP and 7 miles of mains as intended, we had to cut down the plant to 3,000 HP and 4 miles of mains. It was hoped that when the public saw a start made further subscriptions would come in—but this hope was not realized, and in every part of the works there was pinching and saving, dispensing with many essentials to economical working, and postponement of necessary improvements. I should like to have given your Society more details as to what we had to put up with, but to do so would form a paper of itself. Under such conditions the management expenses and general establishment charges were too much for the productive capacity of the works, being the same for the 3,000 HP and 4 miles of mains as they would have been for the 6,000 HP and 7 miles of mains. These management expenses were very heavy, the directors' fees alone being at the first £1,200 a year.

When the company were in a position to commence delivering air, they began by taking on customers at very low rates, in order to give the business a start. After they had begun to make more headway they were unwilling to raise the rates of their earlier customers, lest they should lose them, and thus discourage others from coming on. Thus, although they had many customers paying 6d., 8d., 1/-, and even as much as 6/- per unit of 1,000 cubic feet, yet the unremunerative rates of the earlier ones—some of whom paid as low as 1¼d. per 1,000—pulled the average rate down to about 3¼d. per 1,000. It was, however, creeping up, and had the company been able to hold

out until it reached 5d., they would have been earning a small profit, even under the adverse conditions I have described.

This brings me to what I consider the main cause of the failure, viz.: the leakage in the air mains. The corporation, acting under the advice of Sir Frederick Bramwell, set aside *our* original specification for the air mains, and required us to use gas welded air mains in accordance with a specification furnished by them, and these mains were laid under the direct superintendence of the corporation officials. The ends of these gas welded pipes were very much out of truth, being neither cylindrical nor of equal gauge, so that the compressed rubber ring joints could not be applied to them. Eventually they applied collar joints with lead caulking, of a form known as the Kimberley joint, thus :—

Even with this joint the pipes were so uneven that there were often thick and thin places in the lead, varying as much as half an inch. At first these joints stood fairly well, with a leakage of about 3 %—but this gradually increased until it reached 8 %. After that the larger joints on the 2ft. pipes began giving way, one after the other, the lead being squirted out by the continuous pressure behind—until at last the leakage amounted to 45 %, or nearly half the entire air supply. To make headway against this excessive leakage the engines were run harder, and the reserve engine brought into constant use. Breakdowns became more and more frequent, and the boilers were overworked and could not be cleaned regularly. There was no money available to make headway with the repairs, which became excessive, nor to make necessary alterations and improvements. I did my best to resuscitate the concern, but it would have cost £10,000 to alter the air mains, repair the mischief done, and bring the company into a paying position, and the money could not be raised. The end could no longer be postponed, and after about four years of working, the company went into liquidation.

Although the insufficiency of capital, and the working at unremunerative rates at the commencement created difficulties, and made progress very slow and very uphill, all this might have been got over in time, and the Company ultimately attained a flourishing position. Indeed the show it made in spite of drawbacks which would have astonished the members of your Society, furnished proof in itself of the soundness of the principle on which it was based. The direct cause of the fiasco was the unfortunate selection of gas welded wrought-iron pipes with lead caulked collar joints—in opposition to the views of myself and my colleague, Professor Robinson. I will only add that we never gave our final certificate for the work, and that the contract had to be ultimately discharged by mutual agreement between the directors and the contractors. We always repudiated any responsibility for the air mains, and at the Leeds meeting of the British Association in 1890 I took the opportunity of publicly saying so, although at that time the mains were working fairly well. I send you report of my remarks on that occasion, which you will find at page 19 in the pamphlet by Professor Lupton."

Mr. W. J. Jenkins, in replying, after thanking the members for their kind reception of the paper, and for the thanks they had given him, pointed out to Mr. Saxon that the object of the paper was not to point out a way of superseding the large individual power plants of such businesses as the cotton mills of Lancashire, where the best engines and boilers could be used in a direct way, and where the power could be produced as economically as in a central station and without the cost of conversion; but to indicate a means for cheapening and bettering the power supplied to a vast number of small concerns, where small boilers and wasteful engines were now used at great expense, and with much production of smoke. In every town there were great numbers of industries using from one-eighth to 100 indicated horse power; the greater portion of them were purely town industries, and could not migrate, like the larger works and mills did, into outlying districts. In many of such small concerns the first cost of a boiler and engine was a great item, but the constant care and attention, and the labour of

feeding fuel to the boiler were out of all proportion to the results produced. Besides that, there were scores of industries using power, or which could use power advantageously, where it would be quite impossible to instal engines and boilers, or even gas engines, but where an air engine would not only cost far less at first, but could also be placed in any corner out of the way. It had been his original intention to point out the particular advantages of the Central Station system, but Mr. Thwaite had already done that portion so admirably in his *paper recently read before the Association that the writer thought it unnecessary to go over the same ground again.

Referring to the Birmingham scheme he said that he had no knowledge of it in any way except what he had gathered from friends, and from foreign literature on the particular subject. He understood, however, that the firms who used the air in Birmingham were well satisfied with it, and that so far as its mechanical success was concerned that was perfect, and many of the users would gladly have paid more for it than for its equivalent power generated on their own premises, on account of its greater convenience and the small amount of attention required. It was a singular fact that several foreign authorities had been to see the Birmingham plant, and had expressed their opinion of its working as being unfavourable to success. In the first place they pointed out that a very large capital had been spent in producing very little power; and that less advantage had been taken of recent improvements than would have been the case on the continent; and that the class of consumers supplied was not of the right sort, being generally users of considerable power, who had space and means to make use of steam power on a sufficiently large scale to pay them; consequently the price to be obtained for the air was low.

In reply to Mr. Lewis he said that he quite agreed with him as to the rude contrivances turned out by eminent firms, and called compressed air machinery, and much of the prejudice against the system was due to that one fact. As regarded the leakage he must differ from Mr. Lewis, if ordinary care was taken at first to test the mains; his experience had been that the loss, where iron mains were used and due care taken at first,

* See Thwaite on Electrical Transmission of Power from Coal Fields. Transactions, 1892.

was very little indeed, and that opinion was borne out by authorities in all parts of the world. The pneumatic railway to which Mr. Lewis referred was not a compressed air plant at all, but acted by the reverse method. A partial vacuum was produced in a pipe line, and the action of the atmospheric pressure forced a piston along; the piston was attached to the carriages and there was a kind of flap valve the whole length of the pipe—miles upon miles long—and the piston where attached to the carriage ploughed the flap open as it passed along. He had seen scores of schemes tried to prevent freezing, but none were truly successful that did not heat the air immediately before admission to the motor in one way or other. In certain cases where the compressor drove only one motor, it was possible to return the air back to the compressor after exhaust, and then by the use of water traps and snow boxes it was possible to dry the air to such an extent that freezing did not result, there being practically no moisture to freeze.

He was glad of Mr. Constantine's contribution to the discussion, because he had pointed out some uses to which compressed air was actually put in Paris. He believed that the Popp system was a success a little while ago, and they had gradually crept up from a few horse-power to something about 12,000, and that spoke much for the usefulness of the scheme to the Parisians. The figures he had given in the paper were the results of his own tests so far as they applied to the compressors and motors.

In reply to Mr. Webb he would say that each of the systems had its particular usefulness; that the production of the secondary power after the steam had been produced was in the order: electricity, compressed air, hydraulic, but beyond that it was necessary to know all the conditions. For slow-moving, heavily-loaded machinery hydraulic power was most efficient, for high speeds and continuous loads electricity might have the advantage, and compressed air came between them, being more efficient than either in some cases, and less efficient than one or other in other cases. It had always struck him that the electrical method was well adapted for mining work where there was no danger from gases, for their could be no two opinions as to the convenience of electrical conductors in the winding shafts

as compared with pipes. Yet where there was a danger of explosion from sparking, the compressed air came in and was as safe as any method could be.

In reply to the President's question he said that for high pressures, lead and even copper joint rings had been used with marked success, but for ordinary pressures they were not required. The ordinary cone-faced valve was as good for air as for steam, when used vertically, but flat-faced valves were often used when they lay in a horizontal position, because they allowed better for downwards wear. On account of its elasticity and lightness there was practically no alteration in pressure in the mains when the air was suddenly stopped. Velocities of over 100 feet per second were not uncommon with air, whereas with water the maximum was kept as near 5 feet per second as possible, for fear of bursting the mains from the sudden shock of stopping the flow. Air had been used for buffering the delivery valves times out of number, and almost every other conceivable device had been tried, but the whole system of buffering was wrong in principle, and quite needless if the valves were properly moved by power.

Mr. MARSHALL asked whether tram cars could be run with compressed air. Several systems had been experimented with in England and Scotland, but none had succeeded. The only successful compressed air tram car was that of M. Mekarski, which was used at Paris and Berne, the pressure being about 450 lbs. per square inch.

APPENDIX.

The following calculations have been collected together in the form of an appendix, because they will be more useful for reference and as an assistance in study than for discussion :—

Let P_0 represent the absolute pressure, in pounds per square foot, of air in its initial state.

Let V_0 represent the corresponding volume, in cubic feet, occupied by one pound weight of the air.

Let T_0 represent its temperature on the absolute scale, that is its temperature (t^0) on the Fahrenheit scale plus 461° or $T_0 = (t^0 + 461)$.

Let P_1 V_1 T_1 be the corresponding quantities under other conditions of pressure, volume, or temperature. If further sets of similar quantities are used they will be distinguished by other suffixes, 2, 3, 4, &c.

Then the equation connecting the quantities P_0, V_0 and T_0 can be written thus :—

$$\frac{P_0 V_0}{T_0} = R \quad \ldots \quad \ldots \quad \ldots \quad \ldots \quad (1)$$

R being a constant quantity.

Therefore $P_0 V_0 = R T_0 \ldots \quad \ldots \quad \ldots \quad \ldots \quad (2)$

and $P_1 V_1 = R T_1$

assuming that the temperature is the same in the two cases, then $T_0 = T_1$

and $P_0 V_0 = P_1 V_1 \ldots \quad \ldots \quad \ldots \quad \ldots \quad (3)$

One pound weight of dry air occupies a volume of 13·09 cubic feet when the temperature is 60° F. [= (60+461) = 521° absolute] and under the pressure of the atmosphere, usually taken as 14·7lbs. per square inch, or 2,116·8lbs. per square foot. Therefore, for one pound of air, which is the invariable unit, and the easiest to deal with on that account,

$$P_0 V_0 = 2{,}116{\cdot}8 \times 13{\cdot}09 = 27{,}709 \text{ foot-pounds} \ldots \quad (4)$$

But from equation (1)

$$\frac{P_0 V_0}{T_0} = R \qquad \therefore R = \frac{27{,}709}{521} = 53{\cdot}18 \text{ foot-pounds... (5)}$$

Supposing for the present purpose that no change of state would occur during the process of cooling air down to absolute zero temperature, then the volume occupied would be extremely small. Conceive this minute volume of air, weighing one pound, to be enclosed in a cylinder, fitted with a piston, one square foot in area, and 13·09 feet length of stroke. The top side of the piston is in contact with the atmosphere, therefore the downward pressure is 2,116·8lbs. Let heat now be added until the temperature is 521°, or 60° F., then the volume will be 13·09 cubic feet, and the weight of the atmosphere upon the piston will have been raised 13·09 feet, that is

$$2{,}116{\cdot}8 \times 13{\cdot}09 = 27{,}709 \text{ foot-pounds}$$

of work will have been done upon the atmosphere, while the absolute temperature of the air has been increased 521°, hence the 53·18 foot-pounds (equation 5) represent the amount of work done by air in expanding against a constant pressure, while the temperature is raised 1°.

The specific heat of air at constant pressure is $0{\cdot}2377 = S_p$, say, or to express this quantity in dynamical units :—

$$0{\cdot}2377 \times 772 = 183{\cdot}5 \text{ foot-pounds,}$$

consequently the total energy spent in raising the temperature of one pound of air in the cylinder from absolute zero to T_0^0, and in doing work upon the atmosphere is :—

$$521^\circ \times 183{\cdot}5 = 95{,}603 \text{ foot-pounds, ... (6)}$$

but 27,709 foot-pounds have been spent on the atmosphere, therefore the energy spent on the air in the cylinder alone is :—

$$95{,}603 - 27{,}709 = 67{,}894 \text{ foot-pounds,}$$

and $$\frac{67{,}894}{521} = 130{\cdot}3 \text{ foot-pounds,}$$

or $$\frac{130{\cdot}3}{772} = 0{\cdot}1688 = S_v$$

S_v being the specific heat at constant volume.

To estimate the number of units of heat required to raise the temperature of W pounds of air through t^0 degrees F. on its way to a motor, use S_p, that is $W \times t^0 \times 0{\cdot}2377$. But when the question is to calculate the units required to increase, by

means of heat, the pressure in a receiver of definite capacity from P_1 to P_2, use S_v.

From equation (3) it is clear that so long as the temperature is the same the amount of energy contained in a pound of air is the same, no matter what the pressure may be. It follows, therefore, that the whole of the work spent by a steam engine or other prime mover in compressing air is lost as soon as the temperature, after compression, has fallen to that before compression, and this is generally what occurs. But before compression no expansion is possible, whereas the greater the compression the greater is the possible expansion, and the greater the intrinsic energy that can be abstracted. This is sometimes spoken of as a drawback to the use of compressed air, but unjustly, for exactly the same thing occurs with the hydraulic system. For instance, the whole power of the engine is spent in placing the load of the accumulator in a position to do work by falling from one point to another. In both cases work is spent in order to obtain what may be called a potential.

The ratio $\frac{S_p}{S_v}$ is generally represented by the letter γ, or :—

$$\frac{S_p}{S_v} = \gamma = 1{\cdot}408$$

also $$\gamma - 1 = 0{\cdot}408$$

also $$\frac{\gamma}{\gamma - 1} = 3{\cdot}451$$

also $$\frac{\gamma - 1}{\gamma} = 0{\cdot}29$$

To find what proportion of the total energy contained in air and due to its state it is theoretically possible to obtain, we calculate what energy it contains before expansion, and subtract what it contains afterwards, thus :—

$$95{,}603 - 95{,}603 \left(\frac{P}{P_0}\right)^{\frac{\gamma - 1}{\gamma}}$$

the result gives the ft. lbs. of energy available for external work by expanding down to atmospheric pressure.

To calculate the power required to compress and deliver one pound of air in an ideal cylinder without clearances, with

perfect valves and made of a conducting material which will allow all heat generated by the compression to pass away as quickly as it is formed so that the compression is isothermal, we proceed thus :—

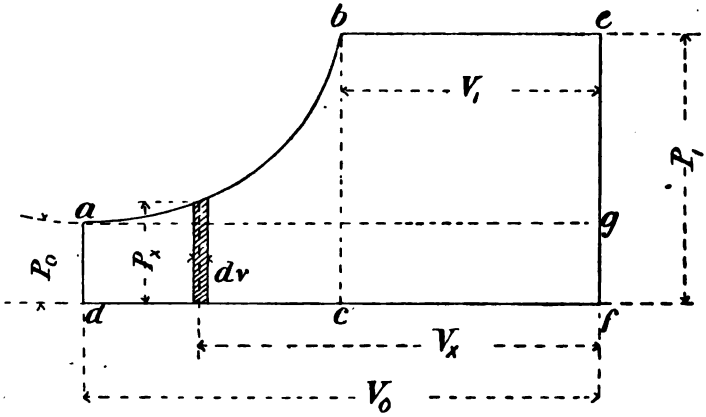

The line $a\,g$ is the atmospheric line, $d\,f$ absolute zero of pressure. The work to be done consists of two parts, first the compression, represented by the area $d\,a\,b\,c$, then the delivery represented by the area $c\,b\,e\,f$: and since the atmospheric pressure assists in one stroke as much as it opposes in the other the area $d\,a\,g\,f$ must be deducted from the former sum to get the net work.

From equation 8 we have the general expression $P\ V_0 = P\ V_1$

hence $$P_1 = P_0 \frac{V_0}{V_1}$$

therefore when the volume is V_x the pressure is :—

$$P_x = P_0 \frac{V_0}{V_x}$$

Making the usual assumption that for any very small portion of the stroke the pressure remains constant and equal to the mean pressure through the small movement, the work done by the piston while it moves through the small portion, $d\,v$, of the stroke will be represented by the product of the pressure at that point by the distance $d\,v$, and the area of the piston, which will be taken at one square foot. Let w = the work done during one of these small intervals.

Therefore the work $w = P_x \, d\,v$

but $$P_x = P_0 \frac{V_0}{V_x}$$

thus $$w = P_0 \, V_0 \frac{d\,v}{V_x} \quad \ldots \quad \ldots \quad \ldots \quad (7)$$

Assume now that V_x varies between the limits V_0 and V_1 then the area *d. a. b. c.* will be equal to the sum of all the small areas $P_x \, d\,v$.

To find this sum we must integrate (7), and if W is the sum of all the small portions w, we have:—

$$W = P_0 \, V_0 \int_{V1}^{V0} \frac{d\,v}{V_x}$$

$$W = P_0 \, V_0 \, (\text{hyp. log. } V_0 - \text{hyp. log. } V_1)$$

$$W = P_0 \, V_0 \text{ hyp. log. } \frac{V_0}{V_1}$$

This can also be written $$P_0 \, V_0 \text{ hyp. log. } \frac{P_1}{P_0}$$

because $$\frac{P_1}{P_0} = \frac{V_0}{V_1}$$

Add to this the area *c. b. e. f.* $= P_1 \, V_1$ and deduct the area *d. a. g. f.* $= P_0 \, V_0$ and we have

$$W_1 = P_0 \, V_0 \text{ hyp. log. } \frac{P_1}{P_0} + P_1 \, V_1 - P_0 \, V_0$$

but $$P_1 \, V_1 = P_0 \, V_0 \text{ from (3)}$$

therefore $$W_1 = P_0 \, V_0 \text{ hyp. log. } \frac{P_1}{P_0}$$

or using common instead of hyperbolic logarithms:—

$$W_1 = P_0 \, V_0 \times 2{\cdot}3026 \text{ log. } \frac{P_1}{P_0}$$

Since $P_0 \, V_0 = R \, T_0$ this expression can also be written:—

$$W_1 = 53{\cdot}18 \times T_0 \times 2{\cdot}3026 \text{ log. } \frac{P_1}{P_0} \quad \ldots \quad \ldots \quad (8)$$

To give some idea of the energy required to compress 1lb. of air isothermally, take the temperature as the standard 60° F. and let the final pressure be 60lbs. per square inch on the gauge, then

$$W_1 = 27{,}709 \times 2{\cdot}3026 \times \text{log. } \frac{74{\cdot}7}{14{\cdot}7} = 45{,}044 \text{ foot-pounds.}$$

If the temperature is not the standard, 60° F., the other formula (8) is more convenient.

This calculation shows the least power that will do the work, and may be taken as a standard to compare the actual practical compressor with.

Now suppose that, instead of compressing the air in a perfectly conducting cylinder, we do it in a cylinder which will permit no heat to escape either inwards or outwards, then not only will the pressure and volume vary but the temperature will also vary. In such a case the compression is adiabatic, and the relation between the three quantities is as follows:—

$$P_0 V_0^{\gamma} = P_1 V_2^{\gamma} \quad \ldots \quad \ldots \quad \ldots \quad \ldots \quad (9)$$

$$T_1 = T_0 \left(\frac{P_1}{P_0}\right)^{\frac{\gamma - 1}{\gamma}} \quad \ldots \quad \ldots \quad (10)$$

$$T_1 = T_0 \left(\frac{V_0}{V_2}\right)^{\gamma - 1}$$

V_2 is used instead of V_1 to show that the volume is different, though the pressure is the same as in the previous case.

To find the power required to compress and deliver one pound of air, we proceed somewhat as before:—

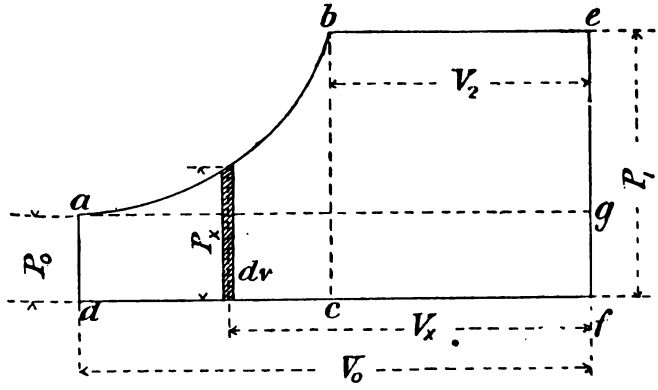

Find the area $d.\,a.\,b.\,c. = w_1$

then $\qquad w_1 = \int P_x \, d\,v$

From (9) $P_x = P_0 \dfrac{V_0^{\gamma}}{V_x^{\gamma}}$

$$\therefore \qquad W_2 = P_0 V_0^{\gamma} \int_{V_2}^{V_0} \frac{d\,v}{V_x^{\gamma}}$$

or $$W_2 = P_0 V_0^{\gamma} \left[\frac{1}{(\gamma - 1)\ V_2^{\gamma-1}} - \frac{1}{(\gamma - 1)\ V_0^{\gamma-1}} \right]$$

and by reducing

$$W_2 = \frac{1}{\gamma - 1} \left(\frac{P_0\ V_0^{\gamma}}{V_2^{\gamma-1}} - P_0\ V_0 \right)$$

and remembering that $P_0 V_0^{\gamma} = P_1 V_2^{\gamma}$ we have by substituting:—

$$W_2 = \frac{P_1\ V_2 - P_0\ V_0}{\gamma - 1} \quad \ldots \quad \ldots \quad \ldots \quad (11)$$

To this must be added the area *c. b. e. f.* $= P_1\ V_2$, and the area *d. a. g. f.* must be deducted as before.

$$\therefore \quad W_3 = \frac{P_1\ V_2 - P_0\ V_0}{\gamma - 1} + P_1\ V_2 - P_0\ V_0$$

Reducing $$W_3 = \frac{\gamma}{\gamma - 1} (P_1\ V_2 - P_0\ V_0)$$

$$= \frac{\gamma}{\gamma - 1} P_0\ V_0 \left[\frac{P_1\ V_2}{P_0\ V_0} - 1 \right]$$

But $$\frac{V_2}{V_0} = \left(\frac{P_0}{P_1} \right)^{\frac{1}{\gamma}}$$

therefore $$W_3 = \frac{\gamma}{\gamma - 1} P_0\ V_0 \left[\left(\frac{P_1}{P_0} \right)^{\frac{\gamma - 1}{\gamma}} - 1 \right] \quad \ldots \quad (12)$$

or $$= \frac{\gamma}{\gamma - 1} P_0\ V_0 \left[\left(\frac{V_0}{V_2} \right)^{\gamma - 1} - 1 \right] \quad \ldots \quad (13)$$

Putting in the numerical values for 60° F.,

$$W_3 = \frac{1{\cdot}408}{1{\cdot}408 - 1} \times 27{,}709 \left[\left(\frac{P_1}{P_0} \right)^{\frac{1{\cdot}408 - 1}{1{\cdot}408}} - 1 \right]$$

$$= 3{\cdot}451 \times 27{,}709 \left[\left(\frac{P_1}{P_0} \right)^{0{\cdot}29} - 1 \right]$$

For different initial temperatures

$$W_3 = 3{\cdot}451 \times T_0 \times 53{\cdot}18 \left[\left(\frac{P_1}{P_0} \right)^{0{\cdot}29} - 1 \right] \quad \ldots \quad (14)$$

Almost all actual compressors are provided with some means for cooling the air by abstracting the heat as it is formed; generally this is done by means of a water jacket, and in such cases γ may be taken to be altered in these equations from 1·408 to 1·3, in which case

$$W_3 = 4{\cdot}333 \times 27{,}709 \left[\left(\frac{P_1}{P_0}\right)^{0{\cdot}23} - 1\right]$$

Substituting the values for 60° F. and 60lbs. per square inch gauge pressure, we find

$$W_3 = 4{\cdot}333 \times 27{,}709 \left[\left(\frac{74{\cdot}7}{14{\cdot}7}\right)^{0{\cdot}23} - 1\right] = 54{,}388 \text{ foot-pounds.}$$

To find the value of $\left(\frac{74{\cdot}7}{14{\cdot}7}\right)^{0{\cdot}23}$ use logarithms thus:—let the value be x, then

$$\log. x = 0{\cdot}23 \log. \left(\frac{74{\cdot}7}{14{\cdot}7}\right) = 0{\cdot}23 \log. 5{\cdot}08$$

$$\log. x = 0{\cdot}23 \times {\cdot}706 = {\cdot}16238$$

and $$x = 1{\cdot}453.$$

If the suction valve springs are too strong, so that there is a slight difference of pressure between the external and internal pressures during the suction stroke, a considerable loss of power is the result. This can be seen from equation (12), for the amount outside the brackets does not alter, P_0V_0 being constant for the same temperature, but the factor involving P_0 inside the brackets varies as a power of the ratio of the pressures. Suppose a difference of 1lb. per square inch to exist on the suction stroke between the atmospheric pressure and that inside the cylinder, then in compressing and delivering at 60lbs. gauge pressure the work required per lb. of air would be

$$4{\cdot}333 \times 27{,}709 \left[\left(\frac{74{\cdot}7}{18{\cdot}7}\right)^{0{\cdot}23} - 1\right] = 57{,}270 \text{ foot-pounds,}$$

a result over 5 per cent. greater than before.

The air should always be taken in as cold as possible, and if the engine room is ill-ventilated and hot, it is better to draw the air solely from the outside where it is cold. By using equation (14) the loss can be estimated. Let the air be drawn from the engine room which is at 80° F., the outside air in which

the receiver is placed being at 60° F., then for the air being used

$$R\,T_0 = 53{\cdot}18 \times (461 + 80^\circ) = 28{,}770 \text{ foot-pounds,}$$

and the work is:—

$$4{\cdot}888 \times 28{,}770 \left[\left(\frac{74{\cdot}7}{14{\cdot}7}\right)^{0{\cdot}23} - 1 \right] = 56{,}571 \text{ foot-pounds,}$$

a result over four per cent. greater than before.

To find the relation which should exist in a two-stage compressor between the pressures in the intermediate receiver, the final reservoir, and the atmosphere:—

Let P_0 be the atmospheric pressure.
" P_1 be the intermediate pressure.
" P_2 be the final pressure.

Then the work done in the low pressure cylinder will be—from equation 12:—

$$U_3 = \frac{\gamma}{\gamma - 1} P_0 V_0 \left[\left(\frac{P_1}{P_0}\right)^{\frac{\gamma - 1}{\gamma}} - 1 \right] \quad \ldots \quad (15)$$

Supposing now that the cooling is so arranged that the air reaches the high pressure cylinder at the original temperature, then the work done in the high pressure cylinder will be

$$U_4 = \frac{\gamma}{\gamma - 1} P_0 V_0 \left[\left(\frac{P_2}{P_1}\right)^{\frac{\gamma - 1}{\gamma}} - 1 \right] \quad \ldots \quad (16)$$

and the sum of these will be the total work.

The only variable portion of this sum will be the term

$$\left(\frac{P_1}{P_0}\right)^{\frac{\gamma - 1}{\gamma}} + \left(\frac{P_2}{P_1}\right)^{\frac{\gamma - 1}{\gamma}}$$

and since P_0 and P_2 are fixed P_1 is the only variable, and by making use of the differential calculus to find what value of P_1 will make this expression a minimum, it will be found that

$$P_1 = \sqrt{P_0 P_2} \quad \ldots \quad \ldots \quad \ldots \quad (17)$$

Substituting this value for P_1 in the above equations it will be seen that they become equal, and consequently the same relationship not only makes the power spent a minimum under the conditions, but also causes the power spent in each cylinder to be equal; and since the ratio of the pressures in each cylinder are the same it follows from equation (10) that the final temperatures in each cylinder will also be the same.

Questions as to the effect of the clearance spaces often arise in actual designing, and though it is commonly known that no loss of power results from reasonable spaces yet no proof is usually given. It might therefore be useful to indicate in its simplest form how such a proof can be arrived at. Consider, therefore, the case of isothermal compression in a cylinder having clearance spaces.

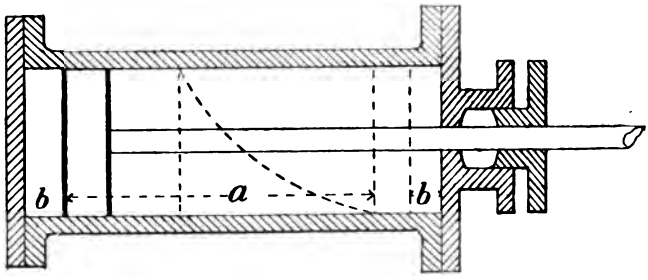

Let the piston be one square foot in area, then the working volume, which is equal to the area multiplied by the stroke in feet, may be represented by a the length of stroke; and b in feet will be the clearance volume. The actual volume being compressed should in all cases be dealt with, therefore the volume of the clearance should be added and that of the piston rod, where one exists, should be deducted. To set out a diagram of work done upon the air in a cylinder of volume a, in the first place without clearance and secondly with clearance proceed in the following manner. Divide the stroke into n equal parts then the volume of each part would be $\frac{a}{n}$ hence the pressure at the first division would be obtained from the formula:—

$$P_0 a = P_1 \left(a - \frac{a}{n}\right) \quad \ldots \quad \ldots \quad \ldots \quad (18)$$

$$\therefore \quad P_1 = \frac{P_0 a}{a\left(\frac{n-1}{n}\right)} = \frac{n P_0}{n-1} \quad \ldots \quad (19)$$

at the second division it would be

$$= \frac{n P_0}{n-2} \quad \ldots \quad \ldots \quad \ldots \quad \ldots \quad (20)$$

and so on for each.

With clearance b formula (18) would be altered to

$$P_0 (a + b) = P_2 \left[(a + b) - \frac{a}{n} \right]$$

$$\therefore \quad P_2 = \frac{P_0 (a + b)}{a + b - \frac{a}{n}} = \frac{n P_0 (a + b)}{n (a + b) - a}$$

and at the second it would be

$$= \frac{n P_0 (a + b)}{n (a + b) - 2 a} \quad \ldots \quad \ldots \quad \ldots \quad (21)$$

Now expression (21) is always less than (20), consequently the curves would be as below :—

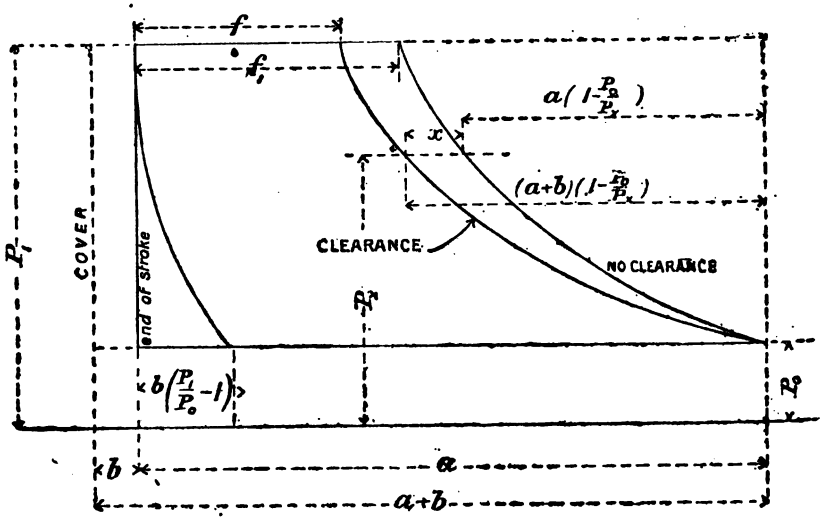

and the distance (x) between them for the same pressure P_x would be

$$x = (a + b) \left(1 - \frac{P_0}{P_x}\right) - a \left(1 - \frac{P_0}{P_x}\right) = b \left(1 - \frac{P_0}{P_x}\right)$$

so the reduction of the delivery part of the stroke is always a fraction less than the clearance b and the greater the ratio of the final to the initial pressure the nearer does the reduction approach b.

The following relations also hold

$$P_0 (a + b) = P_1 (f + b) \qquad \therefore f = \frac{P_0 (a + b) - P_1 b}{P_1} \quad (22)$$

and with no clearance

$$P_0 a = P_1 f_1 \qquad \therefore \quad f_1 = \frac{P_0 a}{P_1} \quad \ldots \quad (23)$$

f and f_1 being the respective volumes delivered in the two cases.

From equation 8 the power to compress and deliver the volume f of air is

$$P_0 (a + b) \text{ hyp. log. } \frac{P_1}{P_0} - b (P_1 - P_0) \quad \ldots \quad (24)$$

The power to compress and deliver f_1 is

$$P_0 a \text{ hyp. log. } \frac{P_1}{P_0}$$

when there is no clearance. The difference in the two cases is

$$P_0 (a + b) \text{ hyp. log. } \frac{P_1}{P_0} - b (P_1 - P_0) - P_0 a \text{ hyp. log. } \frac{P_1}{P_0}$$

which is:—

$$P_0 b \left(\text{hyp. log. } \frac{P_1}{P_0} - \frac{P_1}{P_0} + 1\right)$$

against the compressor with clearance.

Now consider the next stroke, that is the suction stroke while the piston is returning. Without clearance the suction valves would open immediately and the volume sucked in would be the volume a. But with clearance the following effects are caused. First. Volume b of air at pressure P_1 contained in the clearance space would expand behind the piston and would do work upon it to the amount:—

$$P_1 b \left(\text{hyp. log. } \frac{P_1}{P_0}\right) - P_0 b \left(\frac{P_1}{P_0} - 1\right) \quad \ldots \quad (25)$$

The pressure would fall as the piston continued its motion, and when it had passed through a volume:—

$$b \left(\frac{P_1}{P_0} - 1\right)$$

the suction valves would open because the internal pressure would then have reached that of the atmosphere. The actual volume sucked in would consequently be:—

$$a - b \left(\frac{P_1}{P_0} - 1\right)$$

and if this expression be multiplied by $\frac{P_0}{P_1}$ which is the ratio of compression it gives the same expression for f as that given in

equation 22, viz.:

$$\left[a - b\left(\frac{P_1}{P_0} - 1\right)\right]\frac{P_0}{P_1} = \frac{P_0(a+b) - P_1 b}{P_1}$$

Finally, it has been shewn that power to the amount given by equation (24) is being expended during the compression stroke, and the amount given by equation (25) would be given back on the return stroke, therefore the net power is

$$P_0(a+b)\text{ hyp. log. }\frac{P_1}{P_0} - b(P_1 - P_0) - \left[P_1 b\text{ hyp. log. }\frac{P_1}{P_0} - P_0 b\left(\frac{P_1}{P_0} - 1\right)\right]$$

$$= P_0(a+b)\text{ hyp. log. }\frac{P_1}{P_0} - P_1 b\text{ hyp. log. }\frac{P_1}{P_0}$$

If the clearance space causes no loss of power we ought to find that the volume of air delivered, divided by the power required to deliver it, should be equal in the two cases, or

$$\frac{\dfrac{P_0(a+b) - P_1 b}{P_1}}{P_0(a+b)\text{ hyp. log. }\dfrac{P_1}{P_0} - P_1 b\text{ hyp. log. }\dfrac{P_1}{P_0}} = \frac{\dfrac{P_0}{P_1}a}{P_0 a\text{ hyp. log. }\dfrac{P_1}{P_0}}$$

and by reducing they will be found to be equal.

Referring to page (60) of the paper a method is there described for reducing the effect of the clearance spaces by means of a by-pass whereby a connection is established between the two sides of the piston at each end of the stroke just before the piston comes to rest so that some of the air in the clearance spaces on the pressure side of the piston expands into the suction space and is delivered during the next stroke. The diagram would be as below:—

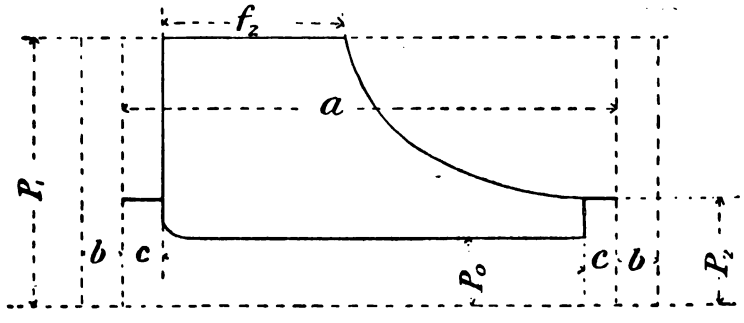

Let a = the working volume as before.
,, b = the clearance at each end.
,, c = the amount the delivery portion of the working stroke is shortened at each end by the opening of the by-pass passages.
,, P_2 = the pressure after equilibrium.
,, f_2 = delivery volume.

Then $$P_2 (a + 2b) = P_1 (b + c) + P_0 (a + b - c)$$

$$\therefore \quad P_2 = \frac{P_1 (b + c) + P_0 (a + b - c)}{(a + 2b)}$$

and $$f_2 = \frac{P_2 (a + b - c) - P_1 (b + c)}{P_1}$$

eliminating P_2 we have

$$f_2 = \frac{P_1 (b + c) + P_0 (a + b - c)}{(a + 2b)} \times \frac{(a + b - c)}{P_1} - (b + c)$$

from which the delivery can be calculated and compared with equation (28).

In testing compressors it is often desirable to know the actual volume of air delivered per stroke. This can be done by pumping air into a reservoir of known capacity until a given pressure is attained: the temperature of the air in the receiver should then be taken and the usual corrections should be made to a standard temperature—say the temperature of the atmosphere or of the room in which the compressor is fixed.

Let V be the volume of the reservoir.
,, A be the working volume of the compressing cylinder.
,, n be the number of strokes to increase the pressure to P_1.
,, P_0 be the initial reservoir pressure (absolute).
,, P_1 the final reservoir pressure (absolute).
,, e be a factor of efficiency of volume ($e\,a$ = actual volume delivered per stroke).

Then $$V P_0 + n.e.a. P_0 = P_1 V$$

or $$\frac{V + n.e.a.}{V} = \frac{P_1}{P_0}$$

$$\therefore \quad e = \frac{V (P_1 - P_0)}{n\,a\,P_0}$$

If e is known

$$n = \frac{V (P_1 - P_0)}{e\,a\,P_0}$$

Professor Unwin's rule for the loss of pressure due to friction in air mains is as follows :—

$$P_2 = P_1 \sqrt{\left\{1 - \frac{\zeta u_1^2 L}{222{,}900\, d}\right\}}$$

P_1 being the initial pressure in lbs. per square inch, P_2 the pressure, L feet distant, U_1 = the initial velocity of the air in the pipe in feet per second, d the diameter of the pipe in feet and ζ the co-efficient of friction, which for pipes over 12 inches diameter may be taken as 0·003. For smaller diameters Professor Unwin's rule is :—

$$\zeta = 0{\cdot}0027 \left(1 + \frac{8}{10\, d}\right)$$

The power given out by a motor is a very variable quantity depending upon the point of cut-off and the kind of governing, but in the case where the cut-off is so arranged that air is expanded down to atmospheric pressure the amount of work done is

$$\frac{\gamma}{\gamma - 1} P_1 V_1 \left[1 - \left(\frac{P_0}{P_1}\right)^{\frac{\gamma - 1}{\gamma}}\right]$$

The following description of M. Sommeiller's Hydraulic Air Compressor at the Mount Cenis Tunnel is extracted from paper read by Thomas Sopwith, Junr., February 16th, 1864, at the Institute of Civil Engineers; Minutes of Proceedings, Vol. XXIII., page 258 :— (See Plate 1.)

X is the supply pipe of cast iron, 2·04 feet diameter, connecting the machine with the reservoir.

A is the pressure valve, opened and shut by the cam *a*, fixed on a shaft worked by an 8 HP engine.

B is the exhaust valve, worked by the cam *b* on the same shaft as *a*.

C is a valve for admitting the compressed air to

D a pipe leading to a wrot iron vessel or reservoir.

F is a small cylinder with a piston on the valve rod of A, on which a constant pressure of compressed air is acting, to cause the pressure valve to fall quickly.

G is a shaft, on which the cams are fixed for working A and B ; it is driven by a compressed air engine.

d d d, clack valves for the admission of air into
Z, a vertical column in which the compression takes place.
H.O, exhaust level.

The valve A is a movable hollow brass cylinder, about the same diameter as the supply pipe, and works vertically in a copper-lined cylinder attached by feathers to the outer case; by the fall of A communication is opened with the pipe D. It is essential that this fall should be rapid, so that, in the unmasking of the ports, no resistance may be made to the inflowing water; for this reason the cylinder F is applied. The total pressure on the piston is 1,470 lbs., and this, added to the weight of the valve and rod, causes it to fall quickly. A ring of caoutchouc, 2 inches thick, receives the shock, but it becomes crumbled after a time under the effects of these repeated blows, and requires to be frequently replaced. Reedy filaments in the water are more pernicious than sand or mud, clogging the valves, and impeding their free action. Filters are consequently placed at the bottom of the valve-chest; A, is a small hole, *c*, always open to prevent the accumulation of sediment.

B, the exhaust valve is, like A, a hollow cylinder working vertically in a copper-lined cylinder, the reverse of A, opening or unmasking the exhaust ports during its upstroke; a caoutchouc ring receives it when it falls, as in A.

The relative and alternate opening of the two valves is effected by the shape and position of two cams on the shaft G.

C is a conical valve with vertical guides.

DIAGRAMS.

THE UNIV. OF MICH.

Transmission of Power by Compressed Air.

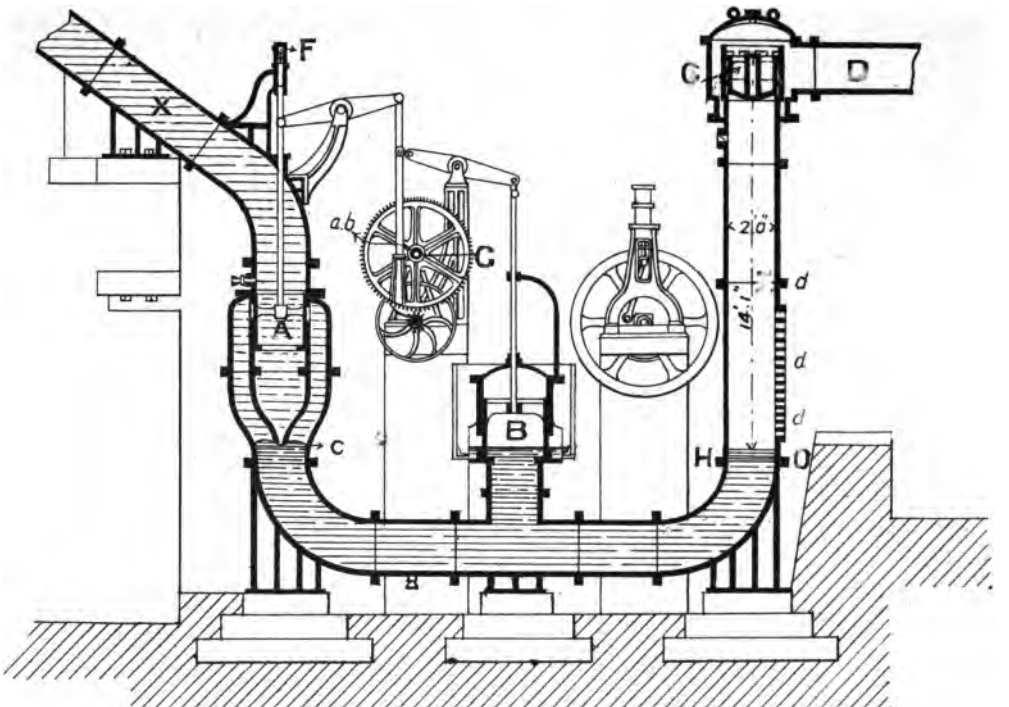

Sommeiller's Hydraulic Compressor.

UNIV. OF MICH.

Transmission of Power by Compressed Air.

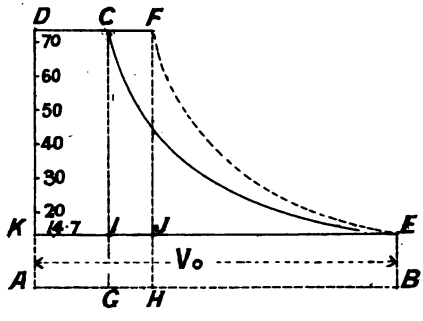

Fig. 1.

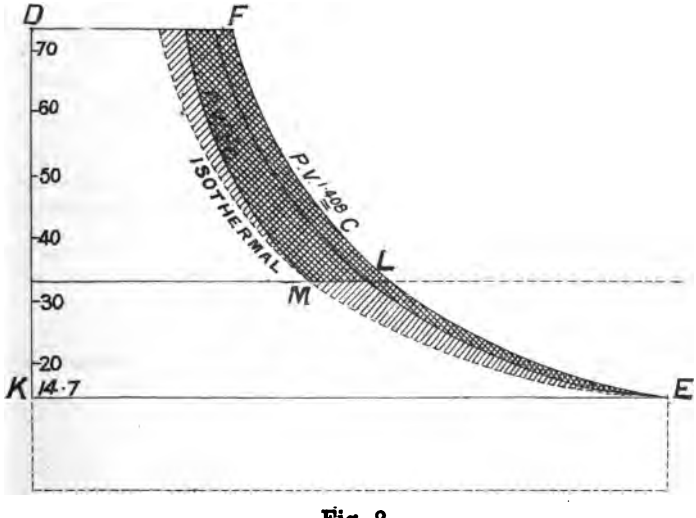

Fig. 2.

Ideal Diagrams of Air Compression.

UNIV. OF MICH.

TRANSMISSION OF POWER BY COMPRESSED AIR.

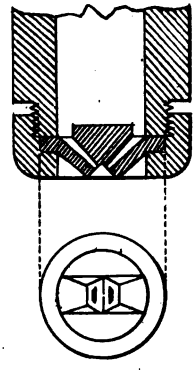

Fig. 1.

COLLADON'S WATER NOZZLE.

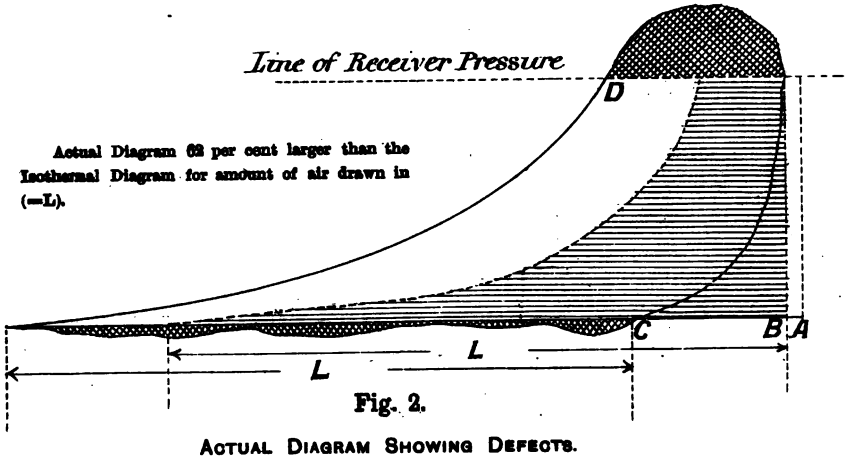

Fig. 2.

ACTUAL DIAGRAM SHOWING DEFECTS.

Loss from valve resistance - thus

Isothermal Diagram .... - thus

Transmission of Power by Compressed Air.

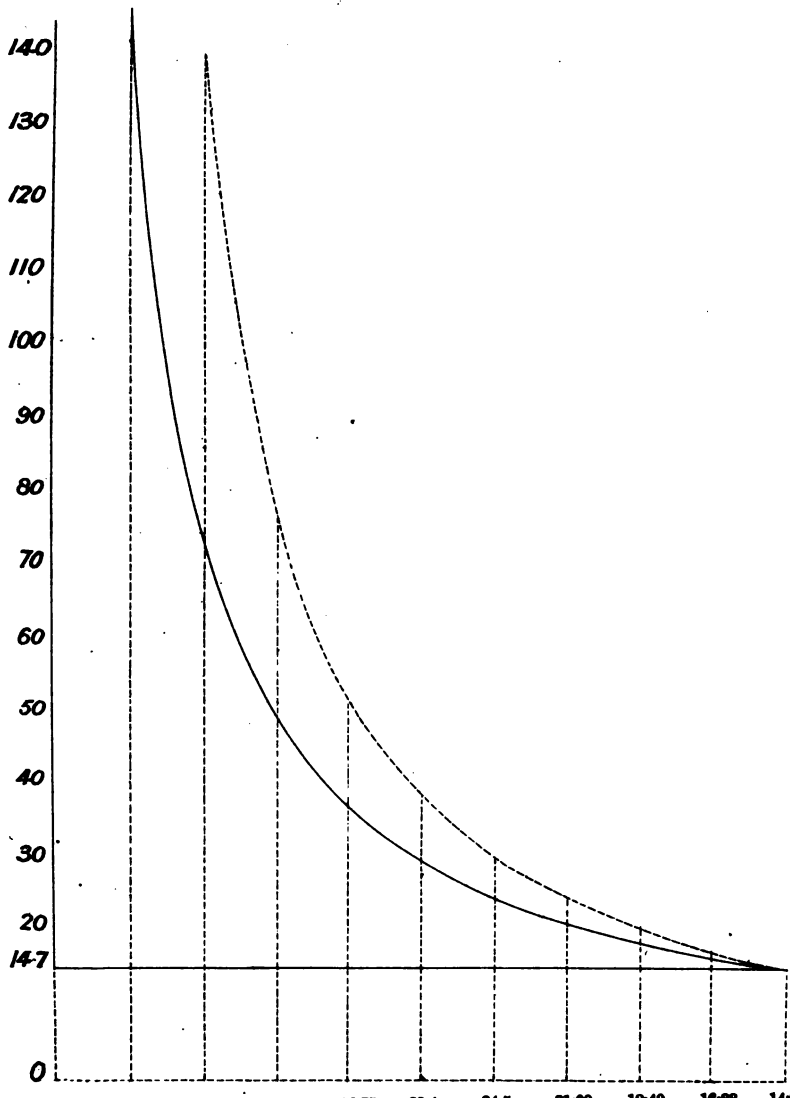

PV	$= C$ 147·00	73·5	49·00	36·75	29·4	24·5	21·00	18·40	16·33	14·7	lbs. per sq. in.
$PV^{1\cdot25}$	$= C$ 261·4	109·00	66·20	46·21	34·96	27·84	22·96	19·48	16·77	14·7	"
$PV^{1\cdot28}$	$= C$ 280·50	115·35	68·64	47·49	35·69	28·27	23·20	19·56	16·82	14·7	"
$PV^{1\cdot3}$	$= C$ 296·81	119·12	70·82	48·86	36·19	28·56	23·37	19·64	16·85	14·7	"
$PV^{1\cdot408}$	$= C$ 376·10	141·7	80·10	53·40	39·00	30·17	24·29	20·12	17·06	14·7	"

Diagram showing Adiabatic and Isothermal Curves with Table of Ordinates for Intermediate Curves.

Institution of Engineers.

UNIV. OF MICH.

Transmission of Power by Compressed Air.

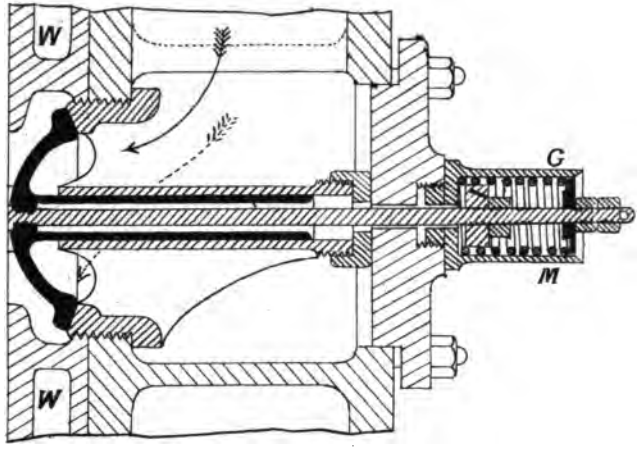

Fig. 1.

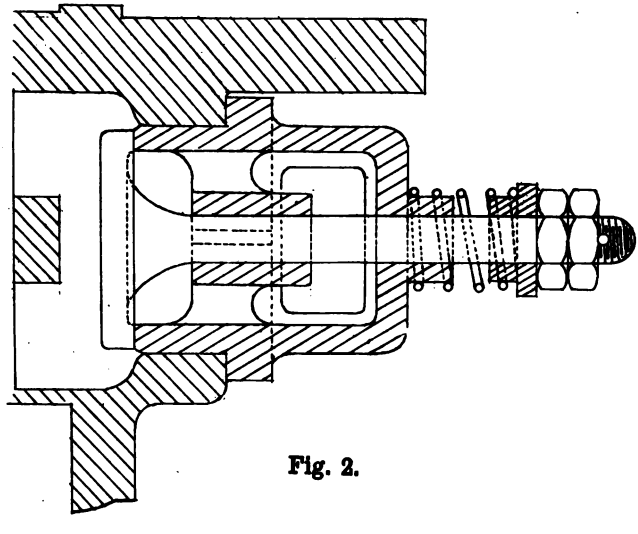

Fig. 2.

Suction Valves.

Rochester Association of Engineers.

Transmission of Power by Compressed Air.

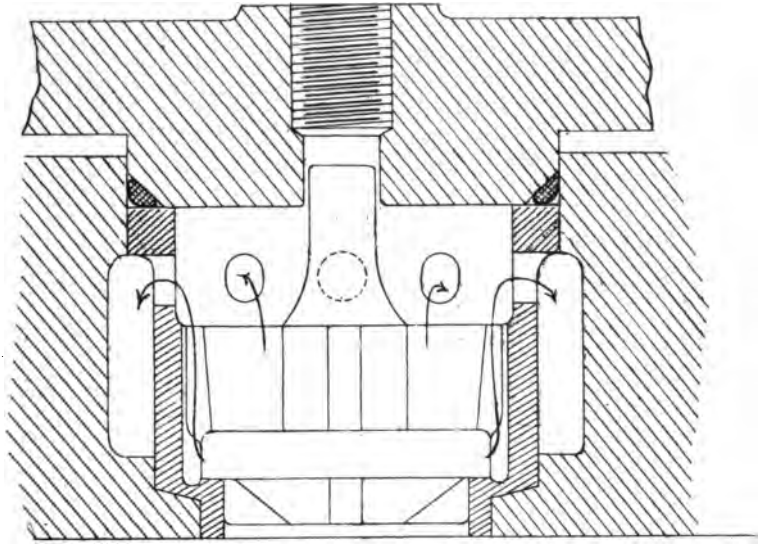

Fig. 1.

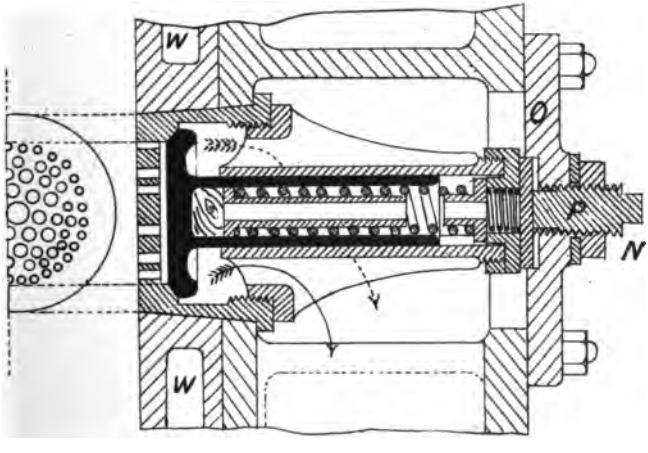

Fig. 2.

Delivery Valves.

Manchester Association of Engineers.

Transmission of Power by Compressed Air.

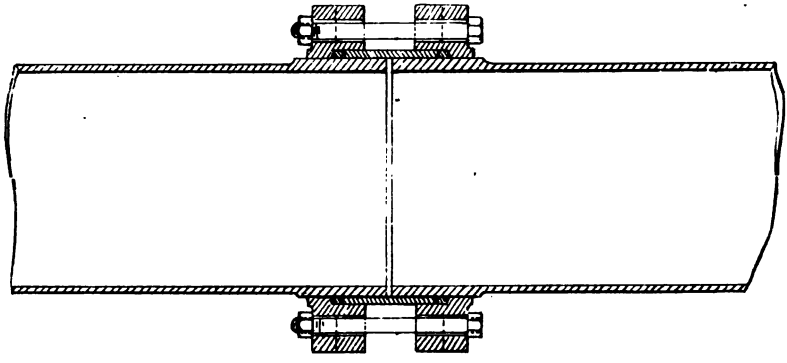

Fig. 1.

Joint for Mains.

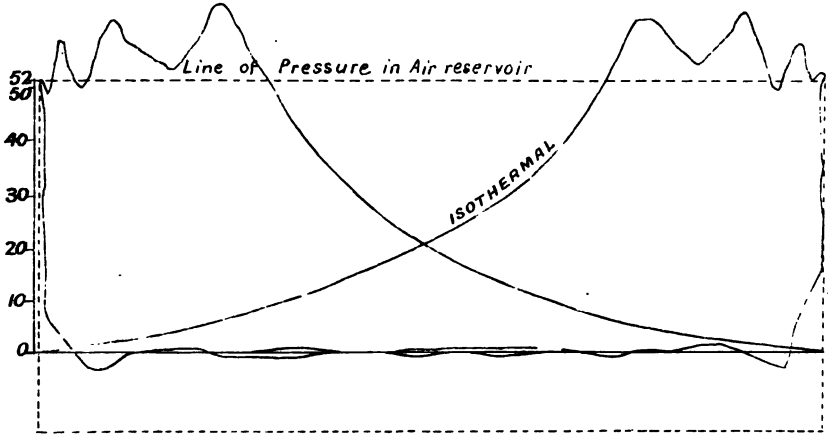

Fig. 2.

Transmission of Power by Compressed Air.

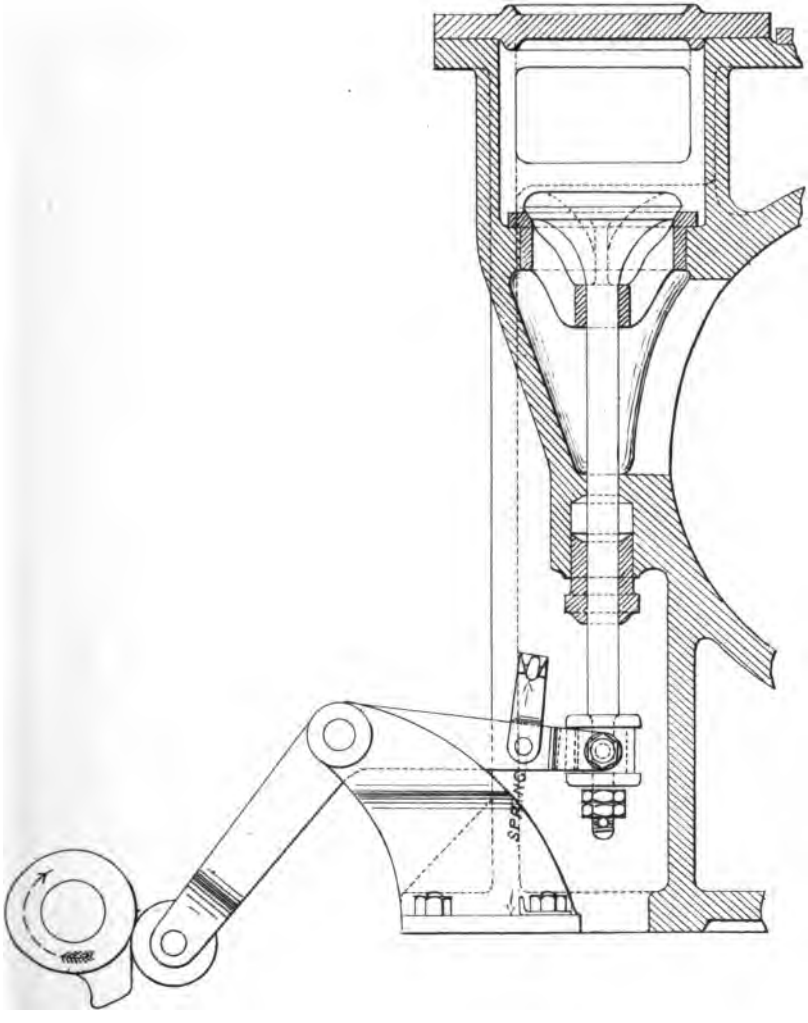

Delivery Valve Worked by Cam.

UNIV. OF MICH.

Transmission of Power by Compressed Air.

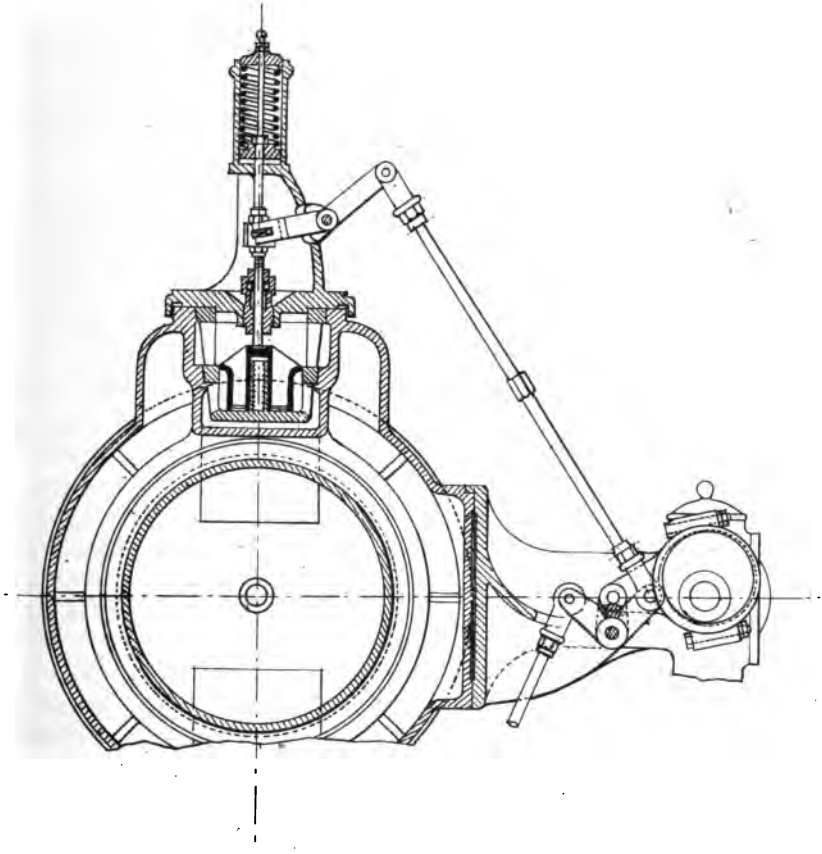

Riedler-Proell Delivery Valve.

UNIV. OF MICH.

The Relations between Employers and Workmen in Engineering Works.

READ SATURDAY, MARCH 11TH, 1893,

BY

MR. C. R. IORNS,

OF BROADHEATH,

MEMBER OF THE ASSOCIATION.

The century in which we have now got well into the last decade, has been marked by great progress in every department of literature, science, and art; but the most remarkable progress it has witnessed has undoubtedly been in the development of the industrial resources of the world, by the introduction of new machinery which followed the inventions and discoveries of the latter years of the last and the earlier years of the present centuries.

Prior to this period, human labour was the supreme element in production,—the most important in all calculations regarding wealth and progress. It may be described as "hand labour," in which men, women and children performed the whole of the work necessary to feed, clothe, and shelter the population. In those days the condition of the labourer had to be first considered. Now, the first consideration is how machinery can be applied where work has to be done, and how it shall be regulated in its operations, so as to produce the most profitable result. While this progress in invention and applied science has been wonderful, and on the whole, beneficial to the world, it cannot be said of it, as of progress in other respects, that it has been altogether an unmixed blessing.

Before the great change—one might almost say, revolution—which was brought about, the progress of manufacturing industry was slow. The foreign trade of the country was scarcely worth taking into account. In the absence of a foreign trade of any consequence, the people depended for employment principally on

the home market; and as nearly all labour was hand labour, employment extended as population increased. Making allowance, therefore, for occasional plagues and failures of crops, the business of the country would be very much the same one year as another. Speculation in trade was scarcely known; there was no new commodity to speculate in, no new markets to compete for, no rapid fortunes of mushroom growth, to be striven after. The manufactures were for the most part domestic, and were carried on in the houses of the people. What we now understand by the word "business" was unknown. The manufacturer employed a group of journeymen and a few apprentices, the number of the latter being apportioned to the number of the former. In this way the proportion of the workers in each trade was balanced, and as there were no sudden displacements of labour by the introduction of machinery, as years went on old habits and methods of life were preserved, while the relations between employers and employed, commencing under an indentured apprenticeship, and continued under a system of journeymanship, became a kind of family relation. With personal knowledge there was, as a rule, personal respect; though, perhaps, not without occasional disagreements which opposing interests will sometimes beget, however carefully they may be regulated. An interesting account of the changes made in the condition of the people, in what are called "the manufacturing districts," by the introduction of machinery, will be found in Gaskell's work on "Artisans and Machinery."

This reference to the condition of labour a century ago is not intended to indicate any preference for the older times, or any desire to see restored what has passed away beyond our power of recall. Much of what has been changed has been improved, while conditions that have been made worse may be regarded as the result of a process of change, preparatory to a higher and better condition of things. Once the necessary machinery was invented, it was madness to attempt to continue the old household system of manufacturing. A more generous thoughtfulness, however, might have led to the establishment of an industrial system unattended by the many grievous evils that, as matters of history, we now shudder at. Many of these evils have been done away with, and it may be regarded as certain that those yet remaining will eventually disappear.

Still it must be admitted that the great change brought about in the manufacturing system of this country by the introduction and development of machinery constituted a crisis of extreme danger. An alteration in the daily business life of the nation which changed the occupation and mode of life of large masses of the people, dooming multitudes to poverty, and conferring on others large gifts of fortune,—destroying family influence on the one side, by superseding domestic employments and the salutary influences of home; and, on the other side, so separating the employer and the worker, and so estranging both in regard to interests which had previously been almost identical, the wonder really is that the interruptions to the industrial peace of the country have been so few, and that the attacks on property by the suffering and discontented have not been more frequent.

It is scarcely necessary here to adduce special facts in support of the condition of things indicated above resulting from modern industrialism. Such facts may be found in John Fielden's "Curse of the Factory System," in Gaskell's "Manufacturing Population," and in the reports of the Royal Commission on the condition of the labouring classes. Neither would it be possible or useful, perhaps, to attempt to assess the blame which might belong to the masters or to the workers for this condition of things. There was no doubt some selfishness on the part of the former and great ignorance on the part of the latter. But, perhaps, most of the suffering and consequently estranged relations between masters and men, which have specially been characteristic of the last forty or fifty years, were due to the vastness and suddenness of the industrial change—amounting, practically, to a revolution in our industrial life—fostered as it was by a cold-blooded political economy which refused to admit a single article of human sentiment into its creed.

The question of the conditions of labour—in other words, the relations between employers and workmen—had become so strained and acute that some forty years ago it crystalized itself into what was called the "Condition of England Question." Since then these relations have greatly improved, notwithstanding certain ugly facts, as, for instance, the prolonged dispute between the Lancashire cotton spinners and their workpeople which, apart from all the loss and suffering the dispute entails, is marked

by an absence of bitterness and acrimony on both sides, and by a forbearance founded upon an enlightened intelligence which have never been so conspicuous in a labour dispute before. This conflict, and many others in recent years, show that the masters have come to regard their workpeople as something more than mere machines, and that the workpeople are disposed to act more like men and less like machines.

A great improvement has therefore taken place between masters and men, and it is significant that to the satisfactory solution of the capital and labour problem the best thought of this and other countries has been given for many years past, and numerous experiments have been tried, some of them at great cost, with a view to hasten this solution. In the absence of any panacea of his own for our industrial troubles, the writer cannot do better, perhaps, than to feebly indicate the tendency of this thought and the nature of the most important of these experiments, without of course, committing himself either to the principles or details of one or the other.

Not only on the Continent and in this country, but in the newer world of America, where the social and industrial conditions are so different, the question confronts the statesman and social reformer. In the January number of the *North American Review* there appeared an article on this problem, by the Hon. D. D. Field, a lawyer of the highest ability, an eloquent orator, and a man who is deeply interested in the welfare of the American people. Mr. Field appears to think there is now greater antagonism than ever before between capital and labour. In this he may be mistaken; there may be this in appearance, but not in reality. Referring to the violence which has accompanied some of the late labour disputes in the United States, Mr. Field observes that violence is both unnecessary and impolitic, "because it alienates the majority." Speaking of the possible remedies for this industrial strife, Mr. Field contends that compulsory arbitration is impossible, because the State cannot fix the price of labour any more than that of corn or any other article. "How then," he asks, "can the State, as such, aid in the reconciliation of capital and labour," and suggests that when capital applies for privileges, the State may make the concession of them dependent upon an undertaking that labour shall also have a definite share in the accruing profits. He points

out that the gigantic enterprises known in the States as "Corporations," are only allowed to exist on certain stipulations laid down by the State, and suggests the additional condition for the privileges conceded to these associations by the law, that they should be required to give the workmen an interest in the results. As an illustration he gives the following example:—

Let us imagine such an establishment as I suggest. Suppose a factory to be chartered, with a capital of a million dollars divided into two hundred thousand shares of five dollars each, three-fifths of them to be payable in cash or property as at present, and two-fifths in prospective labour; the former to be invested in land, buildings, machinery, and whatever else may be necessary for such an undertaking, and the latter reserved for such workmen as may be taken into the concern; the skilled workmen to be allowed wages, say, for illustration, at the highest rates of the market, four dollars a day or more, and the unskilled two dollars a day, and each one to be registered for four hundred shares. If the earnings were 6 per cent. on the capital, each skilled workman would be credited in twelve months—that is to say, for 300 days' work—with $1,200 for wages and $120 for profit. Deducting $500 for his supplies, including food, clothing, and lodging, there would be left to his credit at the end of the year $820, which would pay for a hundred and sixty shares of the stock. He would then have had his living and become the owner of 164 shares of the company. In the next year he would acquire 164 additional shares, and in less than three years would have more than paid for all the four hundred. The rate of wages, the supplies furnished, the admission and dismissal of share workers, and the discipline of the establishment should be vested in all the shareholders, actual or expectant, while the financial department, and the purchases and sales, should be in the hands of the cash or property shareholders. Capital and labour would thus be brought into closer communion, and made to lean on each other. To this end the requirement of a cash or property capital would be in part dispensed with, and instead of it an obligation to labour accepted. The share-workman must have the means of living while he is earning the price of his shares. He must be enabled to live as cheaply as possible, by having his supplies furnished at the lowest price. He must have fair wages, and withal reasonable maintenance, and the prospect of bettering his condition by becoming a participant in the profits of the combined labour and capital. But all concerned should have the power of superintending the conduct of the workmen, choosing between applicants, and dismissing the idle or incompetent, recompensing them, of course, for what they have already earned and saved.

As already stated, these views are given here to show the tendency of the best thought of our time, for the solution of the Capital and Labour problem. This tendency is, undoubtedly, towards what may be called a co-partnership between the two great factors in industrial progress. These views may be said to be theoretical, but as shown in a report recently issued on the state of industry in the United States by Mr. Drage, Secretary of the Labour Commission, they have been practically exemplified in several large workshops, some of them iron works, in the States.

The most striking and successful experiment of this kind, however, is at a large foundry at Guise, in the north of France, of which, perhaps, a short account may have interest for the members of this Association. A very interesting narrative of a visit paid to this establishment is given by Mr. Charles Hancock, in the *Fortnightly Review* for the present month, but the following particulars have been supplied by a gentleman who has visited the works more than once, and has had every opportunity of seeing the inner workings and ascertaining their financial position.

M. Godin, the founder, was born at Esquéhéries, a small village of the Department of the Aisne, France, on Jan. 26th, 1817, and died at the "Familistére de Guise," Jan. 13th, 1888. He was the son of a locksmith, and after serving his apprenticeship with his father he worked as a journeyman in various towns in France, settling at Guise, when he was 23 years old, in business on his own account, in a small way, as a manufacturer of heating and cooking stoves in all varieties, articles for the household, building, hygiene, &c. Being a man of good business ability and great inventive faculty, he rapidly built up a large business.

In 1859 he had accumulated a considerable fortune and was able to begin to put his social schemes into practice, his first work being the erection of suitable dwellings for his workpeople. The arrangement of these houses was in large blocks, four storeys in height, with a glass covered quadrangle to each, balconies running all round at each floor, staircases for access being provided at each corner of every block, and communication made between each of the blocks at the corners so that persons can pass from any part of the buildings to any other part entirely under cover. Shops are provided in one of the blocks, in which necessaries of any kind in the shape of food or clothing can be purchased. Reading and

billiard rooms, medical attendance, &c., are also provided, so that social life can be carried on under the easiest and best conditions. These buildings are of a most substantial character, and the greatest care has been taken to provide the most convenient and hygienic arrangements, while the rents are very moderate, and the amount of accommodation can be had most suitable to each persons means or requirements.

A nursery has been established where the children of the tenants can be taken care of during the day, in cases where the mother's attention is wholly taken up with household work, or work outside. The women in charge of the nursery are carefully selected on account of their special capacity for taking charge of the training of children, their education in good manners and habits of observation being commenced at the earliest age, but no brain work is imposed until they are transferred to the elementary schools where there is accommodation for all the children of those who are employed in the works, the number attending school being about 500. No charge is made either for the use of the nursery or schools, the cost of their maintenance being a first charge on the profits of the Association, the amount necessary for this purpose being about £1500 per annum.

A theatre for dramatic and other entertainments, lectures, &c., was provided by M. Godin, also a café and wine shop, swimming and other baths, and laundry, supplied with hot water from the works, for the use of the residents free of charge.

Allotments are provided at a small charge for those who wish, and large pleasure grounds (formerly Godin's private gardens) are planted with fruit trees, flowers, &c., for the use of all the work-people.

In 1887 Godin commenced to give his workers a share of the profits, paying himself first, interest at the rate of five per cent. for his capital, then out of the balance of profit 12 per cent. as remuneration for his services as Managing Director, the remainder being divided amongst his employes in proportion to the wages they received. For the first three years this bonus amounted to eight per cent. on wages, each having the amount credited to him in the books as share capital, on which he was entitled, and had added, dividend at the rate of five per cent. on his accumulated profits.

In 1880 M. Godin registered his business as a Co-operative Association, and divided his workpeople into three classes, viz.:—

Associates.—Those who had been in the works five years and upwards, have at least £20 capital in the Association, able, at least, to read and write. These are elected, by ballot, at the general meeting.

Societaires or Special Members.—They must have worked under the Association for three years, and be admitted by the Committee of Management.

Participants.—Must be 21 years old, free from military service, have worked one year under the Association, and be admitted by vote of the Committee of Management and the President.

There are *Auxilaires* in addition to the above. These are persons who have not been on the staff for 12 months, and are not therefore eligible for election.

Provision having been made for five per cent. interest on capital, for nursing and educating the young, for the sick and those unable to work, for necessaries for subsistence, 25 per cent. of the remaining profit is given to intelligence, and 75 per cent. to wages of labour and to wages of capital, divided *pro rata* on the earnings of each. At the beginning of the Association 25 per cent. was allowed for reserve fund, but in a few years this fund reached in value one-tenth of the capital, and this apportionment was discontinued.

Managing Director	4%
13 Members of Board of Management	16%
Pupils at State Schools	1%
Rewards for Inventions	2%
Board of Inspection	2%

During 12 years—

Capital has received	£122,000
Labour ,, ,,	£130,000
Pension & Necessaries Fund	£ 32,000

The 25 per cent. to intelligence is given partly to the administration, superintending council, encouraging inventors, and to aid children of exceptional ability in pursuing their studies after leaving school.

Members of the Association at the age of 50 years (or before, if incapacitated) and upwards are entitled to a pension of £60 per

annum and upwards, according to the position they have attained on the staff and the amount of share capital standing to their credit.

In the year 1892 the members of the Association were classified as follows:—

Associates	214
Societaires	228
Participators	554
	996

And to this total have to be added 327 other holders of shares, who have retired from active work and are only interested to the extent of the dividend they receive on their capital, and pensions.

The total staff employed at the works numbers about 1500, and the wages per annum amount to about £86,000. The annual turn-over is about £160,000, for a capital of £184,000.

The Familistére contains rooms for 460 families, the total number living in these associated homes being about 2000. The cost of buildings for the associated homes amounts to £78,000, and these and the workshops stand on 100 acres of ground.

The Association is managed by a Managing Director, who is elected at a meeting of the Association. He is assisted by a Managing Council, which meets monthly.

The Managing Council and the Director form two other Councils, which meet every week—the "Industrial Council" and the "Council of the Familistére."

The Managing Council is composed of ten members, directors of the principal services, and of those members who are elected every year at the general meeting. The Managing Director presides at the three councils.

The wages at the Guise Foundry are higher, and the hours worked per day are less, than at similar establishments in France.

Godin was reimbursed his capital with the profits made every year; he was paid 5 per cent. on his capital, and the earnings of capital received a further share of profit *pro rata* with labour, and he was guaranteed the Managing Directorship for life.

Mr. Hancock, in concluding his narrative in the *Fortnightly Review*, says:—"It was naturally impossible, in a visit of short duration, to make oneself thoroughly acquainted with all the details of the scheme; but I saw enough to be convinced that the

social improvement in operation at Guise abundantly justifies the claim made for it—that it is the most important and practical undertaking of a social and industrial kind of the age."

Whether it be possible for the large industries of this country to be successfully carried on under such a scheme as this is another and, perhaps, a debatable question; but upon two or three points there can hardly be a doubt. If it were possible, it would no doubt do away with the antagonism between capital and labour; if it be not possible, this must be due more to a want of sympathy, misunderstandings arising from suspicion, want of knowledge—particularly of a technical kind, and to the unequal conditions which obtain in the same industry, especially in the rate of wages, in different districts,—than to any mere geographical position.

It is encouraging, to say the least, to notice that the old deep-rooted prejudice of the British workman against the use of machinery is fast dying out; and with the progress of education, especially of a technical kind, it will soon be extinguished. We have depended too long upon the superiority of our physical condition and of our natural resources. If we desire to hold our own, our boys and young men must have the best opportunity of increasing the skill which has now become to a large extent hereditary in our workpeople, and discard the old "rule-of-thumb" plan in conducting mechanical operations.

It is contended by those who have carefully studied the Guise experiment, that the system of apprenticeship at the works is designed to give the highest possible technical skill; and it is because of the skilful manner in which the various processes in the works have been perfected, that the progress of the business has been so rapid and continuous.

To enable the faculties of a man—mental and moral, as well as physical—to attain their full development, it is now contended that shorter hours of labour are necessary. As you are all aware, an interesting experiment of what is known as "the 48-hours week" is being tried by a Manchester firm of engineers, Messrs. Mather and Platt. Whether all that is expected from this experiment will be realised is very doubtful; but whatever the result may be, the experiment will be watched with the greatest interest by all large employers of labour, and should the expectations of those who

have faith in it be approximately realised, it will give an impetus to the demand for shorter hours that it will be difficult to resist.

It is contended by the advocates of shorter hours for labour, that it is physically impossible for a man to keep up his full working energy for longer than a given time, although it must be apparent that this will depend upon a man's physical constitution. Taking some of the evidence, however, which was given before the Labour Commission on this point, it seems to show that the shortening of the hours of work does not necessarily mean an increase in the cost of production. Mr. Bushill, of Coventry, testified that his men working 50 hours per week produced as economically as when they worked 55 hours. The men received the same rate of wages for the shorter as for the longer period, and the employer says he lost nothing by the transaction. Mr. Wm. Allan, M.P., also stated that his experiment of reducing the hours from 54 to 48 per week, with a reduction of 5 per cent. in wages, did not affect the amount earned by the men to any extent, the production in fact being as cheap with 48 as with 54, which enabled him to put the wages up to the 54-hours rate for 48 hours work. It may be interesting to the members to know that the firm with which the writer is connected, Messrs. Geo. Richards & Co. Ltd., of Broadheath, have for some years so arranged their working hours as to have only one break during the day, for dinner, and this arrangement, while in no way detrimental to the firm, is duly appreciated by the men.

The other points in the synopsis of this paper must be only briefly touched upon. One cannot but feel that if the workmen, and especially the leaders of the trade unions, both in the engineering and in other industries, were wise they would give some attention to securing greater uniformity in the rates of wages that exist in similar industries in different districts. It is obvious, of course, that the cost of living varies to some extent in industrial centres not far apart, but hardly to the extent to which rates of wages in these centres vary, while the cost of carriage differs very little. If greater uniformity could be brought about in this matter, it might do something to mitigate the keenness of industrial competition which is often the cause of bitterness and conflict between employers and workmen.

Would it not also conduce to more harmonious relations between masters and men if there were a little less social stiffness on the part of masters and managers, and a little less prejudice on the part of the men? An improvement in the former respect would no doubt lead to an improvement in the latter. Inside the workshops the prevailing feeling should be one of duty, and would it not tend to foster such a feeling if outside the works there could be occasional meetings with the men at which questions affecting both parties alike could be mutually and fearlessly considered, any little grievance stated, and the general question of the future of the industry engaged in fully discussed.

There still remains the question, can proper relations be maintained between employers and employed without the latter becoming participators in the business; and if so, how can this be effected?

The co-operative scheme detailed above contains the elements of success so long as the business is a profitable one, and this is likely to be the case where every one sees it to be his interest to produce the greatest quantity of work at the smallest possible cost. But sometimes circumstances occur which cause heavy and serious loss; then the position becomes awkward. The employed are not likely to agree to work for considerably reduced wages until the losses are made up. They simply remove themselves and their effects to another sphere of labour, and the employer is left to bear the loss alone.

The fact is that the interests of capital and labour are identical, and it is owing to the abundant employment of capital that there is and can be a market for labour; and to ensure proper relations between employers and employed, the latter must be educated to see this, and to acknowledge that the capitalist should have an adequate return upon the capital invested.

As things now stand, many of the employed seem to think that all they have to do is to get inside the gates of the works a certain number of times per week to entitle them to draw their wages at the week end, utterly ignoring the common-sense principle that the employer is entitled to their full services during working hours.

All present must be aware of the general dilatoriness displayed by the men in getting to their benches or machines after the bell has been rung. As a rule fully five minutes are lost at each starting time before work is commenced, and this entails a serious loss to

the employer. Take the case of a firm employing 500 hands, with three starting times a day. The total time per day would be 125 hours, making a loss equal to the rental of a works employing this number of hands.

Another feature is the ingenious manner in which the men in all branches "nurse" their work when they have reason to suppose that orders are scarce, and how, in the case when orders are plentiful, they seize upon the most trivial points to harass the concern.

It is a matter for regret that owing to the want of thought arising from defective or little education, the workmen are now so easily led astray by the plausible phrases of the professional agitator. To ensure industrial peace and prosperity it is essential that our workpeople be educated to the fullest possible extent, and then they will more and more recognise how identical their interests are with those of their employer, and be more influenced by that spirit of equity and justice expressed in the motto—"A fair day's work for a fair day's wage."

To conclude, the closer the relationship between employers and employed can be drawn, and the more fully the interests of each can be made identical, the nearer we shall be to a state of industrial peace and prosperity.

If this paper should conduce in any degree to the bringing about of such a state, the writer will be gratified and amply rewarded.

DISCUSSION.

Mr. Henry Webb thanked the author for bringing such an important subject before the Association. As regards the paper itself, he would simply remark that the illustration of the proposed method of the American lawyer (Mr. Field) seemed to lack practical application. He could not see how such a theoretical idea could be practically carried out. It seemed to possess two great defects, the one that it created too many masters, and the other that it was based on the curious supposition that there was always a profit. In considering Mr. Godin's experiment at Guise, it should be borne in mind

that the place was the only one of its kind in France, and besides having no opposition or competition to contend with had the further advantages of being assisted by a high protective tariff. Therefore, for ordinary circumstances of trade and competition, it was not a fair illustration, and besides, similarly to the American instance, the element of probable loss was ignored. The author had referred to the system of apprenticeship, and perhaps it would not be inappropriate therefore, to mention a system of apprenticeship which was adopted at the works of his friends, Messrs. Howard & Bullough, and which he believed was the best in the world.

He was somewhat disappointed that the author did not make more extended reference to the paper on "Labour and the hours of labour," by Mr. W. Mather, M.P., in which were set forth some extraordinary propositions as to Trade Unions regulating the hours of labour and wages for each district, and which seemed to him to utterly ignore the competition in other towns. The Bill which Mr. Mather was bringing before the House of Commons was practically a reflex of his paper in the *Fortnightly Review*, and to say the least, it was an extraordinary measure. The Bill rendered Trades Unionism supreme, the employers' interest being of no concern whatever, and in fact it really did hardly appear as if the latter would have power to close the works and retire, if they desired, from business altogether. He quite admitted, and was convinced that the subject of capital and labour and its remuneration was of pressing importance, and one that would have to be resolutely faced. He might mention, in conclusion, that one of his friends, who was a most enthusiastic man for benefitting the human race, determined to establish an industrial partnership on the East Coast. He was to be allowed a percentage on the capital and profit, and the remainder of the latter to be divided amongst the workpeople. The first year a good profit accrued, the second year it was not so good, then came a loss; the workpeople were dissatisfied when there was nothing extra to divide, and it ended in closing the works.

Mr. George Saxon thought the latter portion of the paper seemed to be the most practical where the relation between

masters and men, and the latest propositions of Mr. Mather were discussed. Undoubtedly the 48 hours question was of the supremest importance in regard to work and wages, and when it came more prominently forward it would have to be dealt with. Many of them might have been conservative in the past, but the fact could not be denied that they had now to deal with labour in a very different manner than formerly. Mr. Mather had embodied his ideas in a Parliamentary Bill, and also in a practical example at his own works for twelve months. That example, to his mind (Mr. Saxon), would scarcely solve the difficulty, inasmuch as these particular workmen would be on their merits, and not under such ordinary conditions as to fairly enable employers generally to come to a decision on the matter. The workmen would naturally work with the greatest energy, and therefore no one could doubt that the experiment would have a successful result as far as that particular case was concerned. Speaking as an employer, he thought they would still have to consider if the new conditions would square with the competition they had to meet, and with the remuneration they had to pay to their employes. Mr. Mather's scheme practically meant an increase in wages, as although the men were to work five hours less, the same remuneration was demanded. Similarly, the machinery would be five hours less in operation, and as tools were now speeded up to their highest practical point, he was afraid the reduced time in that respect could not be made up to meet the cost of the reduced hours, and necessarily the fixed charges of each establishment would be proportionately increased. Of course it was said that the workmen would work with greater intensity, and neutralize the possible loss, but it was difficult to reconcile this with certain of the labour leaders' assertions, namely, that the reduced hours would mean more work for the unemployed. That was a point upon which they would have to form their own opinion; but at any rate, if the latter were true, then it could be more easily achieved by the labour leaders more energetically deprecating systematic overtime in the engineering trade, and penalize it still more in order to restrict the hours thus worked, without resorting to the 48 hours for some time hence. While he certainly thought that the workmen should have every con-

sideration, yet he was of opinion that Mr. Mather had in his scheme given too much power to the Trade Unions. This point was especially emphasised in clause 6 in the Bill, where after a certain period, "whether agreement with the employers be arrived at or not," the Union could legally decide by ballot if the hours were to be reduced without reference to the employers. Personally, he thought such a matter should be decided by an impartial arbitrator, say a judge, a law officer of the crown, or other suitable person. The difficulty of the eight hours' day would largely disappear if the labour leaders would bring about an international reduction of hours. Before concluding, he might mention an important point, namely, the desirability of having a greater uniformity of the rate of wages in different districts, and which would tend in a great measure to negative those disadvantages which Manchester firms laboured under in competing, say with those in Yorkshire.

Mr. Joseph Nasmith remarked that all social experiments had first of all to be tried under more favourable circumstances than probably subsequently would be the case, and therefore he maintained that the lessons which might be deduced from the Guise experiment were such as could be applied to similar projects. He did not underrate the difficulties of divided management, but the firm referred to by Mr. Webb (Messrs. Howard & Bullough) was an example of the enormous advantage which accrued from a system, not of divided responsibility, but of conjoint responsibility. It was quite true that the Guise experiment was somewhat exceptional, but it was equally true that, at the present day, in France there were more than a hundred profit sharing concerns, and similar instances existed in Germany. Even in Alsace there were two or three cases of profit-sharing firms, of which he had personal knowledge, and they had existed not for four years, as in the case quoted by Mr. Webb, but for fourteen years, and in every case the success of the experiment had been most marked, and of infinite advantage both to employers and employed.

No truer assertion had been made than that of Mr. Saxon, when he remarked that the eight hours question had to be faced. Undoubtedly it was one of the most important questions

of the day, and they were living in a fool's paradise if they maintained that the only people who were talking about it were merely "agitators." It had been discussed, and was being discussed by a number of men who were not the uneducated, unthinking men of the past, but men who by reason of the education which was now given, and the cheap literature which could now be obtained, were able to form and definitely express their views on the subject. He thought, therefore, that when the eight hours question came thoroughly to the front, it would be put in such a way that it would be difficult to resist the demand. At the same time, he did not mean to say that the competitive conditions of to-day were not such as to render an experiment of that kind extremely hazardous. He merely wanted to emphasize the fact that it was a question which must be looked at from the point of view of granting it and not simply from that of refusing it.

Another great question which was agitating the minds of the intelligent working classes was practically that of what could be done for the unemployed. Of course every improvement that engineers made in machinery caused or created a large number of men who were unable to obtain employment. He did not mean by that statement that the number of men now employed was not greater than before machinery was used, but rather that the continuous improvements in mechanical methods more and more diminished the requirements for skilled labour. The inevitable tendency of the employment of machinery was to make fewer unskilled hands do the work which was previously done by skilled hands. Such being the case the number of unemployed was constantly growing, and in fact becoming a standing menace to the state. What was to be done? He did not say that the 8 hours' question would of necessity do away with the difficulty, because there was the real practical dilemma which had already been pointed out, that if the 48 hours per week carried with it the same amount of wage it must of necessity increase the cost of production. If the latter were increased, even temporarily, the power of competition was in some degree lessened. On the other hand, however, if the effect of the 48 hours was to make men more intense and continuous in their work, then the problem of the unemployed

remained as far off solution as ever. Whatever be the difficulties, however, he wanted to impress upon them earnestly the fact that there was seething in the minds of the intelligent working class of this country, the notion that the time had come when the difficulties of labour and the remuneration of labour ought to be faced and considered, that they might be made more favourable than hitherto. Certainly it will require all the skill, all the patience and all the knowledge of each intelligent citizen to know how to deal with this question, but he was under the impression that the slowness of movement which characterised the English nation would eventually lead the question to an amicable settlement. With special reference to Mr. Mather's Bill he agreed with the opinion already expressed, that it was an extraordinarily crude measure, but he did not look upon it as anything but an experimental measure. He might add, by way of parenthesis, that the 8 hours' question had taken two distinct shapes, the first idea being a compulsory 8 hours' measure, and which owing to grave opposition had been found to be impracticable; the second idea was embodied in Mr. Mather's Bill, in which an attempt was being made to make it legally optional for any specific trade to adopt it. He was of opinion, however, in leaving out of the Bill one of the parties to the controversy, a good deal had been done to wreck the efficiency of the measure, and he did not believe that was the way in which the question would be solved. He could not concur with the author in the allusions in the paper, to the workman being led away by "paid agitators," as the leaders (so termed) were simply the servants of their respective societies and defended their cause to the best of their ability, and it could not be denied, in recent years, with considerable discretion. The present lock-out in the cotton trade, he contended, was an example of the great moderation shown by the men and their leaders on the one side, and by the masters on the other. Had the dispute happened under the circumstances that existed 20 years ago, there would, he felt certain, have been a great deal of rioting, instead of the present peaceable method of negotiation.

The President (Mr. T. Daniels) said the subject of the paper was so important and so opportune at the present time that he

trusted it would be fairly and reasonably discussed, and if possible, some definite conclusions come to thereon. He suggested, therefore, that the discussion should be again renewed at the next meeting.

On the motion of Mr. ALEX. REA, it was resolved "That this meeting be adjourned to the 25th instant."

In accordance with the resolution passed at last meeting, the discussion on the foregoing paper was resumed on the 25th March, the PRESIDENT (Mr. T. Daniels) in the Chair.

The PRESIDENT, in re-opening the discussion, suggested that possibly before the discussion closed some of the younger members of the Association might consider the desirability of proposing the formation of a board of conciliation to deal with the eight hours question and other difficulties between capital and labour. He had heard it said that since the new system was adopted the gates of Messrs. Mather & Platt's works were closed two minutes before time so that the men had to be in by that time and ready to start exactly on the dot. He did not know whether that was correct. It was said in support of the eight hours system that when young men attended science classes and so on at night, it was better not to start so early in the morning, but it must be remembered that there was another side to that question. The moral effect of getting up in the morning was that it sent men to bed earlier, and the going to bed earlier enabled them to keep out of temptations to which they might otherwise be exposed. It was all very well for Sir John Gorst and others to talk about giving the eight hours in all Government establishments and of doing what could be done to make the men comfortable. Well, he quite agreed, but the question was what the men needed to keep them comfortable on. He feared very much that while our workpeople were getting made comfortable and swimming in pleasant waters the foreigners might run away with their clothes.

The remaining points to be considered were the necessity of a well organized Masters' Association to meet and discuss the

different questions constantly arising in relation to capital and labour, and also the higher education of the workman. In reference to the latter, he thought it was very important that men should have a knowledge of the trade and commerce of the country and the laws governing the same; especially as to the conditions under which contracts had to be taken, and the risks incurred by capital in reference to foreign competition. If a few emigrants landed at Hull there was a great outcry, and questions were asked in Parliament on the subject. In his opinion, however, this immigration was not so dangerous as was the importation of foreign machinery. When foreign workmen came to this country they were looked after and influenced to get good wages. Last year, however, as stated in the *Engineer*, 10,000 tyres and 5,000 axles were imported from Belgium and no comment was made thereon, although our own mills and forges were short of work. Another question worthy of consideration was that of spoiled work, which in a lecture recently delivered at Paisley, Mr. Caird informed his audience amounted to a large percentage of the contract price. If a workman received a bad coin for his wages he very soon wanted it changing, and on the same principle an employer had a perfect right to have good work for his money. As to the uniformity of wages, he was informed that great efforts had been made by the Unions to work up the Yorkshire low-paid districts and Glasgow, but owing to the want of unity amongst the men progress had been slow. As regards the eight hours day movement, he candidly confessed that he could not approve of it until the Belgians and Germans had their hours similarly reduced.

Mr. Thomas Ashbury referred to the recent dispute in the cotton trade as illustrating that although there was still too much friction between employers and employed a very great improvement had been effected in the manner and spirit in which the disputes were carried on—there had been none of the violence which at one time attended such quarrels. With regard to the experiment at Guise, in France, to which Mr. Iorns had referred, it struck him as being rather remarkable that that illustration of co-operation had not been copied to any great extent. As to the 48 hours

system, he did not believe in it, and he quite agreed that such a reduction of hours was not essential to the full development of the mental, moral, and physical qualities of a working man. When the 57 hours system, which was the system in force in this district some years ago, was reduced to 54, it might be in the recollection of many of them that in Glasgow the hours were reduced to 51. Going down the Clyde one day he met a large employer of labour, who told him that as the men were only working 51 hours it had struck him that it was not worth while getting up steam on the Saturday, and the 51 hours had better be divided over the previous five days of the week. This was done, and some three or four weeks later the employer referred to had a deputation from the wives of the workmen, who begged and prayed of him to open his works on the Saturday. They wanted "their men" to be "out of their road" they said. They could not do with them in the house when the cleaning was going on, and if they were asked to give a hand with anything they went off in a sulk to the public-house and had more drink than was good for them. And so the wives thought it would be better if their husbands were kept at work on the Saturday, even without any extra wages. This was an aspect of the question that it might be well to bear in mind. In relation to the particular experiment of which they had heard so much, it was important to remember that Messrs. Mather and Platt's establishment was out of the ordinary run of shops; work of a special character was done, and on that account it would be necessary to discount to a considerable extent the result of any experiment there. An eight hours day would work inequitably so long as there was the existing lack of uniformity in wages in the engineering trades—so long, for example, as goods of the same class could be turned out at 7, or 10, or even 12 per cent less cost as to wages in Leeds or Glasgow than in Manchester. He knew that the Manchester workmen had always been distinguished as the best mechanicians in the country, but their superiority was more than swallowed up by the lower wages paid in other districts. He considered the President was perfectly right when he said at their last meeting that a legal eight-hour day would result in the loss of trade, the closing of works, and the removing of capital.

Mr. A. Rea speaking on the subject, claimed their kind indulgence, admitting that it was a question on which a good deal could be said upon both sides. He agreed with his friend Mr. Nasmith that it was probable the unrest of labour was more widely diffused at present than it had ever been before, and it was not reassuring to know that those who were most aggressive seemed least of all to understand the nature of the result they desired to compass. It might be stated that there were 100 schemes on foot; many socialistic in the worst sense, a few socialistic in the best sense. But the vague idea embodied in all was that if capital could be taken out of the hands of a few and distributed among the many, all workers would be happy for ever. The truth was the great mass of writers and speakers who denounced capital had no accurate conception of what capital really was, and those who ought to speak out allowed judgment to go by default. Hence the power and influence of those who had ends to attain with labour, but who had not the true interests of working men at heart. In studying a question of this kind it ought to be borne in mind how large a part credit played in the commercial wealth of the nation. Credit used in an absolutely legitimate way, and money as such in the shape of current coin of the realm played a very insignificant part in the conduct of business, and the latter would not suffice for 10% of the trade now done. And therefore the division of all the coin in the country would simply result in an utter stagnation of trades. But credit was an intangible thing, and it could not possibly be transferred to the new community of workers; all attempts to snatch at capital or make it insecure must inevitably recoil on those who made it, and first of all on the working classes, no matter what arrangements were made the result in the end must be the same. Certain groups of individuals would have to control expenditure, accumulate capital, possess credit, &c.

They would pardon this digression, but he was endeavouring to show that all changes in the relationship of capital and labour must be a work of time and circumstance.

Speaking of the position of the working classes in the early portion of the century, it must be admitted that the picture was a sad one. An eminent writer, Frederick Engels, who visited

the English manufacturing districts in 1844, found the condition of the workmen, and of their wives and children, so deplorable, the rate of wages so low, health and morality so bad, the greed of gain on the part of the manufacturers in general, so reckless, and the State and society so indifferent, that he expressed the gloomiest predictions, and saw no possible escape save in a violent revolution, which he regarded with certainty unavoidable.

Happily, however, such revolution never came to pass, and anyone who to-day, after a lapse of over 50 years, examined carefully the bettered condition of the working classes in England would be convinced it never would. He knew that this was often denied, it being the custom with the new reformers to paint the present position of working men as mere wage slaves. But that term, when applied to skilled artizans, was downright nonsense.

There was a blind ignorance upon the subject, and ignorance made men strangely confident. Why they would find amongst working men, as happy homes, as true comfort, as genuine intellectual life, as clear and sound judgment as they would find amongst any class of men in any part of the world; those who were prudent, thrifty, self-denying, given to thought, and whose influence extend beyond the class to which they belong. But he did not speak of them alone; the improvement in the social condition of the majority of working men in the last half century was so great as to fill with amazement those who looked from a distance; there was no doubt another side to the shield, but the idea that, excepting in very exceptional cases, any class of labour was worse off now than it was had no foundation, in fact it might be asked how has this change been brought about? Had the State stepped in to regulate hours and wages, to prescribe modes of working, to regulate production, so far as adult males are concerned? Nothing of the kind. The legislation which had effected them had been that which had removed State interference. It was not by law that the workman had won his way upward, it had been by the operation of many agencies, all of which had tended in the same direction. Combination giving the seller in the labour market equality with the buyer; conciliation, bringing masters and men together in friendly discussion of business difficulties, encouragement to

workmen who showed superior ability; co-operation aiding the formation of habits of thrift, promoting knowledge of affairs, and holding out the high ideal of business into which other considerations than gain should enter. Education giving a wider outlook, more powers of judgment, and righteous discontent with existing evils and conditions, and temperance without which none of the other helps were of real avail. If workmen were wise these were the lines they must still pursue. To get shorter hours might appear an advantage; the uncertainty of employment, however, and more especially to remedy this uncertainty is of far greater importance than to reduce hours or raise wages, and would require, as had been stated, all the skill and patience of every intelligent citizen. It was to be feared, however, that working men were being misled upon this cardinal point, by those who knew better, by having their attention turned to legislative enactments as a panacea for all their troubles. Let us have Bi-metallism, shouts one crowd; Municipalisation of Labour, cries another; Division of Profits, echoes a third, and so on was the jargon flung about until there was a very babel of confusion, but how few speak out and tell all that it was a moral revolution they required. Then there was much nonsense talked about the capitalist as though he was worse than the average of men. The working man who became an employer adopted, as a general rule, the ideas and prejudices of his new belongings. Make the hours of labour therefore what they please, divide the land and capital of the country as they choose, revolutionise everything and everybody, and they would only do unmitigated mischief, and put the old world clock back to midnight.

Money was not the principal thing. The real question was how they were to lead truer and nobler lives; without this any mere change of physical conditions, reduced labour, greater gain, may be a curse instead of a blessing. They must abandon the idea of force and welcome that of freedom; as an eminent writer puts it, they must get rid of the idea of class as conferring special honour or privilege, and regard it only as denoting particular sympathies. They must uproot the baneful notion that ease, pleasure, or the accumulation of wealth were the principal aims in life to any truly rational being, and learn to esteem all men for what they were, not for what they had.

They must insist upon equality of opportunity for all men alike, whilst they guarded jealously against any State interferance with the individual, further than was imperatively required to ensure such equality of opportunity. In conclusion, he personally thanked the author for his interesting paper.

Mr. MATTHEW INGRAM advocated the adoption of less stiffness on the part of employers towards the workmen, and of occasional meetings between them on a common platform for the discussion of social or other subjects.

Mr. JOHN WEST said he observed with regard to what had been done at Guise, Mr. Iorns pointed out that it was only after M. Godin had accumulated a considerable fortune that he put his socialistic schemes in operation. He thought that was a remark that would apply to a good many of their socialist and faddist friends. What had been done at Guise was not practicable under such conditions as existed in Manchester at the present moment. A great deal had been said about the Eight Hours' Bill, and although he did not agree with it, yet it must be borne in mind that someone must no doubt make such experiments, and it was well that they had a gentleman like Mr. Mather who was prepared to make experiments that might possibly prove advantageous in the end. His experience was that men could not do as much work in forty-eight hours as they did in fifty-four, and, as Mr. Ashbury had pointed out, they would not all be on one footing even if the forty-eight hours' system were adopted all over the country, for at the present time they were paying something like four shillings a week more in wages in Manchester than was being paid in Glasgow and Leeds. Such a difference represented not a bad profit for the makers of machines. The Amalgamated Society of Engineers ought certainly to do something in the way of levelling up or levelling down wages in order to secure greater uniformity. He would like to see a more conciliatory spirit than existed at present between capital and labour, and it would be well for all parties if boards of conciliation could be formed.

Mr. ALFRED SAXON said that even as there had been evolution in the labour movement so he hoped they would see a new type

of master rising up, men who were prepared to face an eight-hour day, if it should come, and do the best that was possible under the circumstances. But he thought the eight-hour day should begin rather with the women in the mills than with engineering shops. In comparison with mill hands mechanics were pretty well off with their present hours. Mr. Mather had somewhat handicapped the engineers of the district by going in for a forty-eight hours' week without consulting them. The fact that the workmen had not accepted it with any eagerness showed that there was some doubt about the success of the experiment. As employers they would await the result of the experiment with interest.

Mr. Henry Webb said that with regard to the suggestion of the President as to forming a board of conciliation, he had come to the conclusion that it would not be wise for them to meddle with either trade or commercial questions. If the Association was to be of real utility as it had been in the past, by all means let them stick to scientific and mechanical subjects. The question of this evening was whether the shortening of the hours of labour was wise or not. Whether employers liked this subject or not it was before them. They could not afford to disregard the uprising of labour to obtain the full rights to which it was entitled, and employers were bound to weigh well all serious proposals, with a sincere desire to meet every just demand, to examine alleged grievances, and to co-operate with labour to remove them. They might be sure the age when the few made immense fortunes, and the many got little or nothing was quickly passing away; wealth was more evenly distributed, and rightly so, education was making rapid strides, and that meant power.

One factor with which they had to deal was Trades Unionism; this was now a permanent institution of the country, sanctioned by law. On the other hand they had Federations of Employers, and when these two societies were strong, there was a safeguard against unjust, sudden and indiscreet action. One thing these combined forces might easily do, and which would be of immense advantage, would be to form, from the employers and employed, *a committee of reference as to facts*, so that it might

be ascertained exactly and at once what the facts were in relation to any dispute. At present whenever a strike or lock-out occurred the newspaper reports showed there was always a great conflict as to facts. By the appointment of such a committee many difficulties would disappear. Trades Unionism used to be a guarantee that its members were good workmen; now the only test was a subscription to the funds of the Union; the former should not be lost sight of. And if these Unions, besides trying to equalize the price of labour and make it uniform in all districts, would also regulate the conditions, such as piecework, &c., so as to put all employers on the same footing, it would be an advantage.

Reference had been made to Mr. Wm. Mather, M.P. and his attempt to solve the problem, and they should all give him credit for the very best of intentions; it was not desirable to suggest either by inuendo or otherwise that he was animated by any motive but the right one. Mr. Mather failed in not being equitable; he gave undue prominence and power to Trades Unions, and his solution of the difficulties as published in the *Contemporary Review*, November, 1892, failed by being on too narrow a basis. Unions regulating the hours and wages of one district only, ignored the competition of other districts, and it would never do for say Lancashire, Yorkshire, Glasgow and London to have different regulations as to hours of labour. Again, human beings were not yet perfect, and socialistic ideas were all right in theory but did not work in practice, and both Trade Unions and Federation of Employers shut out of view that most priceless of gifts of the Divine Providence, namely *liberty*. Where were they going to stop if the liberty of the subject was going to be regulated by Trades Unions? The responsibility and liberty of the individual was abrogated. In the Bill Mr. Mather had introduced into the House of Commons he also failed through being too much on one side, and not on a broad basis.

At the same time shorter hours of labour would come, and come sooner than some suppose. Experiments, as in Salford, were hastening the time. Most strenuous efforts would be made to make it succeed, and it might be that this extra exertion over

the short period of twelve months might show an equal result as heretofore. What should be their attitude in regard to this matter? They should look ahead and try to guide and mould the thought and opinion and action of the operatives to what was going on outside their little circle; they must try and make them grasp the idea of what was going on in America with her unbounded natural resources, with, as some of them had seen, enormous sources of wealth lying at their doors, with an energetic people working sixty hours per week, and anxious to secure the markets of the world. The Germans with their scientific and technical training working sixty-six hours per week; other countries working seventy-two hours. We must try to get our country to move slowly in changing the hours of labour, not to be too precipitate with reforms of this kind, however desirable, but educate other countries to our standard rather than drive trade away to them.

Mr. James Swift (secretary of the Steam Engine Makers' Society) said that as one of those "paid agitators" on behalf of the working men it was with some diffidence that he rose to speak in such an assembly. Mr. Rea in his speech spoke of the Labour party and its leaders, but he would have the meeting remember that there were two Labour parties—the new and the old. One of these parties seemed to attract to itself all kinds of people, including editors, briefless barristers, soldiers without commissions, individuals who had never done a day's manual labour, who set themselves up as representatives of labour, and of whom, he feared, the public took more notice than they did of the recognised trade unionists of the country. As to the agitation and aggressiveness that were complained of, had there been any aggressiveness of late in the engineering trade? It was said that the engineer was in a better position than he had ever been before; but, as a matter of fact, he was no better off than he was twenty years ago. The rate of wages was the same now as in 1873, and the men were no better off, except that they worked an hour per week less. So he thought it could not be said that they had not shown fair consideration to the employers. They believed, however, that they could gain more by diplomacy than by brute force such as was preached

at the street corners to-day. With reference to the inequality of wages to which reference had been made, the various trade societies had used their utmost endeavours to bring up the localities that had been referred to, to the medium rate. In the Yorkshire district large sums of money had been spent in trying to get the men into the society, and so force up the rate of wages. With regard to the hours of labour, he did not think that, so far as the engineering trades were concerned, they would have a legal enactment for some time to come. At the same time, he was satisfied the men were ripe for shorter hours, and if these were not conceded voluntarily, they might adopt the Trade Union prerogative, and attempt to secure them by a strike; and if they did so, he had no doubt they would be successful. It must be remembered that their societies were not mere ropes of sand, but had ample funds at present, and in time of conflict, power to make levies. They had seen what had been done in the cotton trade, and depend upon it when the engineers came to ask for it the eight-hour day would be fixed as a standard, if it had not previously been obtained by legal enactment. He expressed his approval of Mr. Webb's suggestion for the formation of committees of reference as to facts, and in conclusion expressed the pleasure he felt at the remarks in Mr. Iorns's paper, and the comments of several speakers as to more considerate treatment of workmen. He was of opinion if workmen were treated as fellow-men by managers, foremen, and employers, and not as menials, more work and more contentment would be secured, and then there would be more satisfaction all round.

The Chairman (Mr. T. Daniels), in proposing a vote of thanks to Mr. Iorns for his paper, said they had well considered the very important questions which had been submitted to them. The speakers were all men of position and experience, and felt at heart the importance and responsibility of what they said. He thought the one desire pervaded the whole Association, namely, to do the best they could for the profession, and the welfare and advancement of capital and labour invested in the mechanical trades of this country, so that we as a nation, combined with other commercial undertakings, might in the future

hold our own equally well as in the past, and if possible improve upon that position. He had pleasure in moving "That the best thanks of the members be given to Mr. Iorns for his interesting paper."

The resolution was carried by acclamation.

Mr. IORNS, after thanking them for the kind manner in which they had received his paper, said there appeared little or nothing to say after the able manner in which several gentlemen had taken up the various points this paper was intended to draw forth. In the first place, the object in view was to enable us to learn more, especially from sensible men, practical views on which something could be built up to remove the trouble now existing, and create better feelings between master and man in the future.

From what had been said, there was not a doubt that truly the interests of both were identical, and seeing that for years the workmen in all branches of trade have been combining stolidly together, and forming societies worked from one centre of administration, ought not the employers to take immediate steps to form a similar association, or re-organise the existing one, and place themselves on equal ground as regards combination? The efforts, however, of such an association would be useless (as in the past) unless each member remained truly loyal. It must be patent to most of them that grievances would be then dealt with fairly by a joint Board of Conciliation, and thus remove the curse of England's commerce, "strikes." Labour realising that capital was also combined, our chances of competition with the foreigner would be improved, and capital having greater security, would be invested more in home industries.

In speaking of competition, the eight hours question will have a great effect thereon. Some employers now state that the men do as much in 48 as 53, which on the face of it suggests that the workman up to now must have held so much in hand; but where it comes to machines, as Mr. Saxon pointed out, how are they to make up the loss of five hours if the machines were now working as they should be? The

number of hours, and wages paid, surely must depend on competition from foreign countries, as each year brings fresh producers greater in ratio to the new markets.

The paid agitator Mr. Nasmyth referred to, he feared would not bear closely investigating, and prove the supposed true friend to the working man. The settlement of the cotton strike, which we all hail with satisfaction, would no doubt have been avoided if at first the employers had been one and all mutually combined; thus a loss of twenty weeks' wages to the work people would have been prevented, the chances of creating fresh competitors in other countries minimised, and Lancashire had a better opportunity of retaining its staple trade.

THE BEST DESIGN OF MAIN AND OTHER BEARINGS.

READ SATURDAY, APRIL 8TH, 1893,

BY

MR. ALFRED SAXON, M.I.Mech.E.,

OF MANCHESTER.

Mr. President and Fellow Members,

At the request of the Council I agreed to introduce a discussion on the best mode of constructing and lubricating a main bearing, on the understanding that I need not make any elaborate preparation in carrying out their request. I do not purpose entering into calculations, or giving formulæ and figures, which might be difficult to follow, owing to the members not having had the opportunity of reading my remarks beforehand; but will confine myself to general statements and explanations, such as I am enabled to make from experience.

The practice of engineers and millwrights varies considerably in most matters, and not less so in the particular subject under notice, each one, no doubt, obtaining under ordinary conditions sufficiently good results to enable him to adhere to his own particular practice and design. We must be prepared to admit that a certain amount of latitude may be allowed in matters of this kind before we can arrive at the conclusion that, by obtaining good results from our own designs, other people's designs, if varying from ours, must be wrong. I will venture to say that there is no special design of a main bearing that

will meet all the circumstances and conditions we are called upon to deal with. There is, in fact, no "universal" bearing that fulfils all requirements; but out of a number of different designs it is our business to select and recommend the best and most suitable that knowledge and experience can suggest for the particular case we may be called upon to deal with. Some points to be considered in designing and constructing a bearing are :—

The Cost: There must be a limit in this respect to make it a commercial success, as engineers seldom get orders irrespective of this particular item, which keeps occurring with wonderful continuity in these times of keen competition.

Type of Gearing: It makes a considerable difference whether the bearing is intended for rope or belt driving, or for wheel gearing. There is also the load the bearing has to carry, the speed of the shaft to ascertain, the direction the shaft revolves, the pull or thrust, and any other information we may consider necessary.

What are the types of pedestals that we have the choice of? We have the ordinary pedestal (Fig. 1) which can be

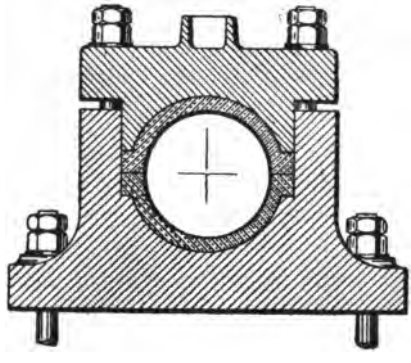

Fig. 1.

constructed with top and bottom steps, or bottom step only and shell cap if there is no lift or pressure against the top

step. This style of pedestal answers very well for beam engines or ordinary cases of gearing, especially when the brasses are made very substantial, and they are mouthed or counterbored.

Then we have the angular pedestal (Fig. 2) which

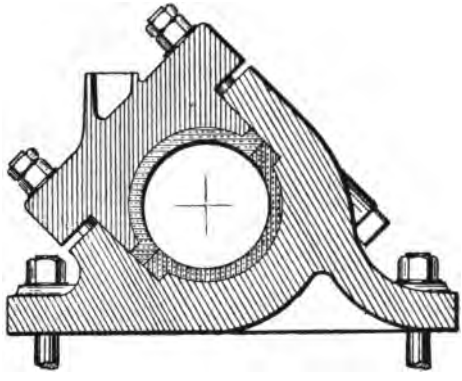

Fig. 2.

may be made with one or two steps, like the ordinary pedestal, to receive the thrust of the shaft in the horizontal centre of the brass. This style of pedestal has a more limited field of application, but cannot be excelled under most circumstances, for rope and strap driving (as shown in Fig. 3),

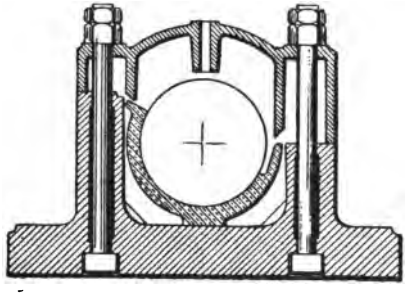

Fig. 3.

if made of suitable length for the pull and speed

Another type is the three-step adjustable pedestal (Fig. 4)

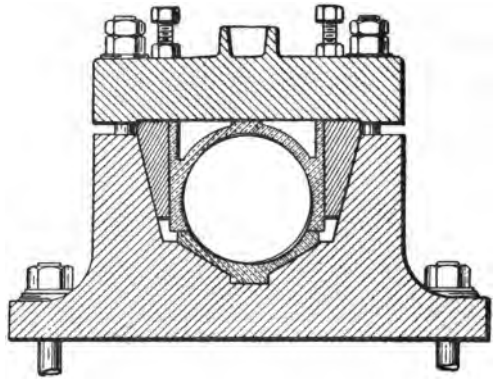

Fig. 4.

which again has a special feature of adjustment in taking up wear, and in being adapted for receiving another direction of thrust in the middle of its steps.

The three-step adjustable pedestal has a very limited field of application, and has been almost displaced by the four-step adjustable pedestal (Fig. 5), which properly constructed is the

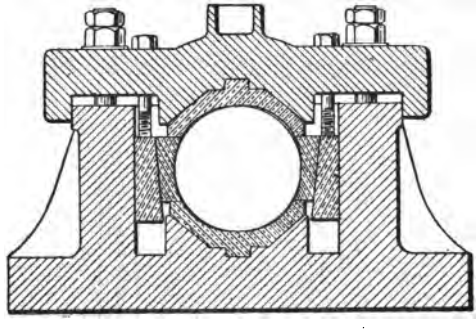

Fig. 5.

best design for horizontal engines, whether gearing or rope driving, that is, provided it is fitted up and finished properly, all the steps being planed or counterbored, to allow of the shaft only bearing in the centre of the steps according to

the thrust or pressure. And further in being made short enough where fitting the neck to allow of some expansion of the brasses without being collar-bound.

Many troubles with bearings have arisen from the fit of the steps to the neck being too good; it is not requisite for steps to be a good fit except in the pedestal itself. A cheaper form of this pedestal can be made with shell cap, retaining the two side and bottom steps.

With these different types to select from, with modifications in detail, along with a choice of metals, and various methods of lubrication, we have sufficient variety for the most difficult cases. Let us see that steps of sufficient thickness are used, whatever design of pedestal may be selected, and that in the boring and finishing, sufficient working play is allowed; also that the bearings are well and truly erected on good substantial fixings and foundations.

Before I leave the subject of the design of pedestals I may say that the theory advanced by Professor Goodman (who I am sorry is not present this evening), stated in March, 1890, was rather remarkable: he said—in defiance of men of considerably greater practical experience than himself—that side steps were not required. I do not for a moment doubt the results he obtained, which indeed may be experienced on railway axles, etc.,; but railway axles and testing machines are not steam engines. The very practice we have adopted for horizontal engines in these adjustable pedestals disproves that. I admit there is not much need for bearing surface on the side brasses, but why should we trouble about the setting of our valves and compression if there is not this action in the steaming of an engine in moving the crank shaft sideways and so causing side wear? The angular pedestal and straight pedestal proved a failure in horizontal engines because we could not take up the play across the sides in those types of pedestal when wear had taken place.

In reference to the question of the lubrication of journals, Professor Goodman in his paper* touches largely upon this question, advocating bath lubrication, which is undoubtedly a

* See Goodman on The Friction and Lubrication of Cylindrical Journals. Transactions, 1890.

perfect form of lubrication if it could be carried out properly. But what does Professor Goodman say?—

BATH, OR PERFECT, LUBRICATION.—In this case the bottom of the journal dips in oil and keeps it thoroughly swilled, and is of course the most efficient method of lubricating a journal. An objection is often raised that bath lubrication is only obtainable in special cases of scientific experiments, and that it is of little or no practical value. The great advantages arising from this system of lubrication are however undoubted, and the author has therefore designed a bath suitable for use with many forms of ordinary journals, and has found it to answer satisfactorily. The arrangement is shown in Fig. 6, where A is the shaft carrying the brass B, to which the bath C is attached by the screws *h h*; the oil is prevented from leaking out at the ends by leather packing *d*. When running at high speeds, the oil is carried round by the shafts, and flies about in all directions. To prevent this, a "baffler" strip *e e* is arranged, slanting towards the centre, and approaches the shaft within about 1-32 inch. Rings of oil form on the journal at each end of the bath, even at moderate velocities, which, if not prevented, will cause a great waste of oil. These are skimmed off by the lips at each corner, *f f*. When properly fitted this bath will answer perfectly at 400 revolutions per minute. The author has not had an opportunity of trying it at a higher velocity, but believes it would be equally efficient at 1,000 revolutions. It can be made of cast-iron, brass, or sheet-metal. For friction experiments, it must not be attached to brass, as it would greatly increase the friction upon it. In Figs. 4 and 5 it is made with flat ends, and wedged up tightly with wooden wedges *w w*.

I believe the form of pedestal he describes could be constructed and adopted for high-speed gearing and the line shafting in our mills in such positions where it would be accessible, and there should be plenty of room to stop leakages; but we could not do with baffler straps and wooden wedges in ordinary every-day cotton-mill practice. I believe the pad system can be applied in a practical way more efficiently and more mechanically than the bath system, that is, if we must take Professor Goodman's own description of his way of dealing with it. In the case of footsteps at the bottom of upright shafts in our large mills, the bath system is adopted with the best results.

We are not so much troubled to-day if we put in our pedestals counterbored, which is equal to cutting away the sides, and have oil pumps for the purpose of continual lubrication, the pedestals to be fitted with oil-drippers for receiving the oil, and thus using the oil over and over again. Then again, oil flats cut in the shafts or spiral grooves are necessary in the lubricating of our large bearings.

I think that I have said sufficient, Mr. President, without saying all that I could upon this subject, to initiate a

discussion, and anything further I will reserve until my reply to the points arising therefrom.

DISCUSSION.

Mr. T. Settle remarked that the ordinary pedestal in many cases worked very well, and the angular form of it was suitable for horizontal engines. The four-step pedestal, although not without defects, worked fairly well, whilst it had the advantage that the bottom part being round, it could be easily taken out. It had, he believed, been found from some experiments that the proper method of lubrication was to put the oil on the top and let it work in. He might mention surface pressure, the material the steps were made from, whether the shaft were of steel or iron, and the question of crank pin bearing as points for consideration in connection with main bearings. As to metals, he had more faith in the old gun-metal than in the alloys.

The President (Mr. T. Daniels) remarked that in locomotive bearings they used a great deal of phosphor bronze. Many people thought the present bearings were made too small.

Mr. Constantine said with regard to metals he could speak a good word for magnolia. He believed that bearings were generally made too small, and numerous difficulties were traceable to this fact; he had known several cases where bearings had proved troublesome, which, when either lengthened or replaced by bearings of larger surface, had given very good results indeed. Bath lubrication was good in locomotive practice, and in stationary practice where applicable, but it was not often practicable.

The President believed that spiral grooves in the necks were better than the oil flats.

Mr. T. Settle thought the conical kind of bearing was wrong in principle. To make bearings larger would greatly increase

the cost. It was advisable to let the shaft in bearings have a little end play.

Mr. A. G. Brown said the firm with which he was connected had tried magnolia with great success. He did not like to see the bottom brass made inaccessible in the bearings.

Mr. Jos. Nasmith agreed with Mr. Constantine that the vast majority of cases of over-heating arose from too small shafts. To make them larger the extra cost would be very little.

Mr. T. Ashbury asked if roller bearings had been tried to any extent. Pad lubrication was, he believed, first used in connection with the railway from Alexandria to Cairo.

Mr. T. Settle remarked that a firm about Manchester who were well known for the moderate size of the shafts they used, obtained better results than almost any other engineering firm.

Mr. A. Saxon, in replying to the discussion, said, in his opinion, it was not so much diameter of bearing as greater length of bearing that was most needed. He believed pad lubrication could be more generally applied than bath lubrication. It was a matter of opinion whether a circular bottom step was the best form to resist the tendency, when a shaft and pedestal got hot, to clip the shaft. He thought the design of the wedge pedestal overcame that. Roller bearings had not, to his knowledge, been much used so far as engine work was concerned, but he certainly thought they would come into force; it would, of course, reduce friction considerably.

Mr. T. Ashbury moved a vote of thanks to the reader of the paper.

Mr. S. Boswell, in seconding the motion, said he thought the twisting strain on the journal had a good deal to do with heating in a great many cases.

The motion was carried, and the proceedings terminated.

UNIV. OF MICH.

G. A. Flinn

THE

Scientific Work of Gustav Adolph Hirn,

In 7 Chapters. (1845—1888)

BY

Mr. BRYAN DONKIN, M.Inst.C.E.,

OF LONDON.

CHAPTER I.

Early Life.—His Work; Experimental and Philosophical.—Fan Experiments.—Friction Experiments.—Mechanical Theory of Heat.

The principal facts in the life of Gustav Adolph Hirn have often been set forth, and most scientific men are familiar with them. Like the lives of many other pioneers of science, Hirn's career was in its outward conditions quiet and uneventful. He was not called upon to undergo the struggle with poverty, which so often falls to the lot of labourers in this field, nor had he the usual pecuniary cares and anxieties of those who devote themselves to unremunerative research. The comparatively easy circumstances of his life would have tempted many men to idleness and luxury; with him they proved an incentive to steady and unremitting labour. But the universal recognition and honour he eventually attained were by no means the objects at which he aimed. If ever it might be said of any man that he loved work for work's sake, that man was Hirn. Nor did he start in life as a scientific discoverer. By the force of his keen curiosity, vivid intellect, and unconquerable love of truth, he was led from one investigation to another, and the goal before him was always the advancement of science, never his own profit. That he achieved both objects; that his labours bore fruit, and his name is now venerated in his own country, and held in high esteem throughout the scientific world, in no way detract from the singular modesty and disinterestedness of his character.

Hirn was born in 1815, and died in January 1890, at the ripe age of 74. His work therefore covers 50 years, and such a half-

century of scientific progress, the world has perhaps never known before. When he began his researches, in the vigour of early manhood, although steam was already applied to practical purposes, its action was imperfectly understood, and its properties had not been thoroughly studied. The causes of the various phenomena manifested had never been systematically investigated, nor the theory and practical working of a steam engine compared.

Still more striking was the ignorance that prevailed of the laws of heat. Heat is one of the primary forces, diffused as universally as light or air. The laws which regulate the action of steam cannot be determined, until they are traced back to the greater fundamental laws governing the phenomena of heat. Yet it was not till this century was well advanced that heat and its mode of action became the subject of scientific investigation. It is the merit of Hirn that he was among the first, not only to see the importance, but to undertake the task, of establishing on a firm basis the principles underlying the manifestations of heat. His studies of Friction, Superheated Steam, and the value of the steam jacket, led him to investigate the great laws he afterwards promulgated in his "Théorie Mécanique de la Chaleur," and with Joule, Mayer, Clausius, Regnault and others, he may claim the honour of having laid the foundations of the science of Thermo-dynamics.

To determine and apply practically the laws of Heat was the chief aim of Hirn's scientific work. Other collateral questions occasionally claimed his attention, but to this subject his main efforts were devoted. Beginning, as we shall show, with an independent discovery of the Mechanical Equivalent of Heat, he traced the principle through its various manifestations, from the then obscure phenomena taking place inside a steam cylinder, to the same great motive force revealed in the farthest depths of space. Heat and its equivalent of power were the keynote of all his studies.

Hirn's work falls into two divisions, experimental and philosophical, the concrete and the abstract. With the first he was chiefly occupied during the early part of his life; to the latter he devoted his riper years. Circumstances caused him first to study the practical working of the steam engine, and the best method of utilising steam as a motive power. From this he

proceeded to examine the science of thermo-dynamics, as shown in a concrete form in machines and human beings, and finally the manifestation of the same laws in the relations of the solar and stellar systems.

Although it is not proposed in the present sketch to deal with Hirn's life, but only with his scientific work, it is impossible to pass altogether over the outward conditions of his early years. His maternal grandfather, M. Haussmann, was the founder of the large cotton mill of Haussmann, Jordan, Hirn & Co. His father was a partner in the firm, and also a distinguished painter. A two-fold bias was thus imparted to young Hirn's character. From his father he inherited his love of art, and habit of lofty generalization, and of a picturesque grouping of details even in abstruse theoretical questions. His mechanical turn of mind, his instinctive perception of scientific facts in their practical relations, which gave special value to his work, had been handed down through two generations of engineers.

At an early age young Hirn who, owing to his delicate health, had never been allowed to attend school, entered the chemical laboratory belonging to the mill. Here he studied chemistry, and the knowledge thus obtained was afterwards useful to him. He did not, however, begin serious work until 1845. About this time he was placed in charge of the steam engines working the mill, an office which he retained for nearly 35 years. Thus he was a practical as well as a theoretical engineer, and throughout his life he made it a rule never to neglect any opportunity of study that came in his way. It was of great advantage to him to be able at once to test his theories practically, and to be compelled to pay attention to the working of steam motors. Rarely has it happened that a scientific man has at his absolute disposal several types of engines, with time and opportunity to study under their changing phases the phenomena of steam; and it is to this circumstance that we owe the invaluable series of experiments, extending over a quarter of a century, which contributed more to elucidate the theory of the steam engine than any other part of his work.

His first paper, read before the Société Industrielle de Mulhouse, Feb. 26, 1845, was on the "Mathematical Theory of Fans." Although it had no connection with the important

subjects to which he afterwards devoted himself, it brought him into notice, and showed his exhaustive method of work. In it he propounded the following question: "Given a volume of air to be displaced under a certain pressure, the dimensions and speed necessary to produce this effect must be determined." Even at this early period he perceived the correct method of dividing power into (I.) That required for the independent action of the machine, and (II.) That absorbed by the actual work done. He next proceeded to determine the most suitable speed in proportion to the dimensions of the fan, and laid special stress on the shape of the vanes that would be found to give the best results. Finally he arrived at the conclusion that, to obtain the maximum effect, a fan ought to displace as much air as possible, and he established his proposition by various and prolonged experiments.

Another small paper "On the gauging of water over tumbling bays" was read before the same Society, Feb. 25, 1846. Its object was to throw light on the then obscure question of the coefficients of contraction, with different heads of water.

Although the subject has since been exhaustively treated by specialists, Hirn's remarks have not been disproved. In particular he drew attention to the influence of the lateral contractions on the head, and maintained that they must be taken into account, in establishing any theory of the fall of water over tumbling bays.

These were preliminary efforts, nor had he yet "struck" the line of scientific research in which he won fame. In 1846 he began a series of experiments on friction that have since become classic, for it was during these investigations that he discovered the Mechanical Theory of Heat. His original object was to determine the best and cheapest oil for lubricating the machines under his charge. He started with the already established fact that the amount of power absorbed in the friction of a machine varied from 65 to 100 per cent. according to the lubricant used. It was evident that by judicious selection, founded on a knowledge of the properties of different oils, an economy of 35 per cent. might be realized. But in order to study the subject with the thoroughness he brought to bear on every question, Hirn was obliged to design special apparatus requiring the most delicate

adjustment. It was at the very threshold of his experiments that he was confronted by one of the great primary principles of nature,—the law of the Mechanical Equivalent of Heat. The phenomena presented were new to him, as to all scientific men at that time, and it will not be without interest to describe the methods by which he arrived at his discoveries.

Hirn devised a small instrument, consisting of a revolving wheel, which dipped into a basin containing the oil to be tested. Above it was a brake-block, on the top of which was a lever carefully balanced, and weighing 50lbs. As the wheel revolved the lever was pulled round with it, and the equilibrium destroyed. To preserve its balance, the lever had to be weighted at the opposite end to the direction in which the wheel was rotating. Hirn soon perceived that the weight to be used varied according to the temperature generated in the wheel, by its friction against the brake. If the temperature was high, the weight required was small; if the temperature fell, a heavier weight was needed; while if the instrument was allowed to work uninterruptedly, and to acquire a certain normal temperature (which depended on the lubricant used, and the temperature of the room, but was always higher than the latter) the mercury of the thermometer in the brake remained stationary for hours, and the weight ceased to fluctuate. This maximum temperature was attained, when the heat generated by the friction was exactly equal to the heat given out by the walls of the instrument.

From a series of 86 experiments, varied in four different ways according to the nature of the oil used, and the number of revolutions, Hirn succeeded in verifying the law he had discovered. The principle thus established he expounded in the following words: "Knowing the weight which will balance the friction at 0°, we can discover by calculation that corresponding to every other temperature, by dividing the first weight by a certain constant number, multiplied by itself as many times as there are degrees from zero to the temperature required." This number he found to be about 1·0492, and it was applicable to all kinds of oil. The immediate result of the experiment was to show that the specific value of the oil employed was of no consequence, the temperature generated by the friction being alone of real

importance. One oil might produce greater friction, and therefore a higher temperature than another, but this effect could be counteracted, by applying cold water to reduce the temperature.

Hirn further observed that the greater the weight on the scale, or the more work the wheel had to do, the higher the temperature. To verify this fact, he carried out about 30 experiments with different kinds of oil. Each lasted about 20 minutes, and the number of revolutions varied from 88 to 100 per minute. The quantity of heat developed fluctuated with the temperature of the instrument. In one experiment, where spermaceti oil was used, the temperature of the instrument was 72° Fahr. and the heat developed = 66·9 calories.*

Other experiments showed that the heat lost by the walls, or the number of calories evolved by friction, added to the specific heat of the instrument, varied in exact proportion to the difference in temperature between the instrument and the room. The greater this difference, the heavier the weight required on the lever.

The proportion between the number of kilograms raised one meter, and the number of calories developed, was almost exactly 0·0027. This number divided by 1 gives $\frac{1}{0{\cdot}0027}$ = 370, or 370 kilogrammetres per calorie evolved.

From these data Hirn was able to deduce two laws, which he verified by repeated experiments. (I.) That the amount of friction representing so much work done, exactly corresponded to a given degree of temperature, and varied therefore with the lubricating properties of the different oils employed. (II.) That the quantity of heat developed by friction was in exact proportion to the mechanical work performed, and independent of the speed, the nature of the lubricant, amount of friction generated, &c. The second proposition, however, he was soon obliged to modify slightly. As the result of increased speed was naturally to increase the heat of any instrument, Hirn found it impossible to formulate the laws governing heat, without taking the speed into account. Heat was the effect to be calculated, but the speed at

* One calorie is equal to 3·968 British Thermal Units.
One kilogrammetre is one kilogram (2·2lbs.) lifted one metre = 3·28 feet.
772 ft. lbs. = 10·76 Kilogrammetres.

which any machine revolved was the originating cause. Speaking generally, the friction was in proportion to the square root of the speed; thus speeds equal to 1, 4, 9, 16, would produce friction of the value of 1, 2, 3, 4. These exact figures apply only in cases where the heat developed by work does not accumulate in the machine. Thus Hirn was amongst the first to discover that increased work, obtained by increase of speed, must be referred in reality to the greater heat evolved.

Not content with the instrument already described for ascertaining the effect of friction, Hirn devised a second, to test different kinds of oil. Two wheels fixed to a shaft were governed by a third rotating on a lever placed at right angles; the weight required to keep this lever horizontal showed the amount of friction.

Hirn had arrived thus far in his experiments, when a paper in the "Journal des Débats," 1854, apprised him that his discovery of the Mechanical Equivalent of Heat had, unknown to him, been anticipated by both Mayer and Joule. With characteristic modesty and candour, he hastened to disclaim any prior merit, and applied himself to the humbler task of verifying the law, and establishing it on a firm experimental basis. That it was scarcely inferior in importance to Newton's principle of gravitation, and entitled to rank with Faraday's discovery of the chemical equivalent of electricity, Hirn maintained from the outset. But by reason of its great and far reaching effects, the law needed to be investigated, and confirmed by the independent testimony of many scientific men.

We have seen that Hirn, when he fixed the Mechanical Equivalent of Heat at 370 kilogrammetres per calorie, differed from Mayer, who placed it at 365 kilogrammetres, and from Joule, who determined it at 417. Hirn at first thought his own number too high. The mean of two experiments on friction with different kinds of oil gave 364·5 kil. met., or almost exactly the same figure as Mayer. Nevertheless it appeared to Hirn impossible that, if the trials were rightly carried out, there should be so wide a difference between the results Mayer and he had obtained, and those of Joule. The fact seemed to imply that the newly discovered law did not admit of universal application, which would be fatal to its value for

scientific purposes. Further study convinced him that the fault lay, not in his trials, but in the conclusions he had drawn from them. Nothing but repeated experiments could set the question at rest, and determine the right number.

Although by this time fully aware that the law applied not only to friction, but more or less to every other natural phenomenon, Hirn continued his researches, well assured that every branch of the subject thoroughly investigated was a distinct gain to science. There are two kinds of friction, viz: (I.) Where surfaces are in direct contact, and disintegration takes place. (II.) Where some lubricating medium is interposed between them. In each case Hirn found that the coefficient, or proportion between work and heat, the mechanical equivalent in fact, varied, though not as much as he had at first supposed. It was highest, 425 kilogrammetres, where complete disintegration took place, and lowest, 315, when a lubricant was employed.

CHAPTER II.

Experiments on the Steam Engine to determine the Transformation of Heat into Work.—Steam Jackets.—Single Cylinder Engines.—Economy obtained, about 23 %.—Heat Balance.—Economy in Superheating Steam.—Influence of the Walls of an Engine Cylinder upon the action of the Steam.

From friction Hirn proceeded to studies of great practical utility. He soon saw that the new law contained a refutation of a theory which had hitherto been accepted. This was that matter could be annihilated, which Hirn shewed to be impossible. Nothing that exists in the universe can disappear; it can only be transformed into some other force or substance. "One kilogram," he says, "falling a distance of 365 metres, acquires a force which is capable of doing work represented by 365 kilogrammetres. The movement of the weight is destroyed, but is replaced by a given amount of heat called a calorie. In other words, a dynamic force is, not destroyed but, translated into another force. To create a force, that is to bring something into being which had no previous existence is impossible, but "facts show positively that in

millions of cases a principle is manifested which was not apparent before." Hirn here expresses himself with caution upon a subject which was still open to much question, but he allowed that at least a pre-existing force is compelled to show itself, where its presence had not formerly been suspected.

The second theory he examined, and hoped ultimately to determine by the aid of the Mechanical Equivalent, was that heat, motion, electricity, light, were parts of one primary principle, and not each of them separate forces. Both these subjects he afterwards treated more fully.

On the great question of heat there were at that time two theories. In the early part of the century Carnot and Clapeyron maintained that heat could neither be destroyed nor transformed, nor could its quantity in any given body be modified. According to the second and later theory, heat was not destroyed, but transformed into motion, and thereby lost as heat, to reappear as power. As was always his practice, Hirn endeavoured to solve these abstruse questions by deductions drawn from actual experiments. Nowhere could the theory of heat be better studied than in the steam engine, and he therefore turned his attention to the phenomena presented by these motors.

If, he argued, Carnot's theory were correct, and heat being indestructible merely passed through and expanded in an engine cylinder, all the heat coming from the boiler would be found in the water ejected by a condensing engine. Every student of mechanical science now knows that this does not, and cannot happen, but at that time (October 1854), the experiment was comparatively new. When Hirn authoritively announced, as the result of innumerable trials, that a large part of the heat actually disappeared in its passage, his assertion was as startling to men of science as a fresh discovery. Not only, if it could be verified, did it render untenable the theory of heat hitherto held, but it confirmed the great law of Mayer and Joule. This disappearance of heat proved incontestibly, first, that the heat was transformed into some other force; and, secondly, that this force could be nothing but motive power, and thus the Mechanical Equivalent of Heat was established.

To demonstrate this proposition, Hirn was obliged to consider the whole question of the action, development and expenditure of heat in an engine. This was best exemplified by studying the action of a steam jacket, to which subject he next devoted himself. By the middle of the century, the use of Watt's steam jacket had fallen into general neglect, because it was supposed to waste heat. Hirn, however, was persuaded that the subject had not received sufficient attention, and that a careful examination of the phenomena presented by a jacketed engine would advance the knowledge of thermodynamics.

The cotton mill at Logelbach contained the following motors. 1. Three Jouval turbines. 2. A Woolf double cylinder condensing engine, steam jacketed, of 112 HP. 3. A single cylinder engine, without jacket, and with variable expansion, of 110 HP. Having these engines at his disposal, Hirn possessed two advantages. First, he was able to work them under close supervision; secondly, by driving them first with water, the exact HP of which was known, and then with steam, he could measure accurately the amount of power generated.

Most of the experiments were made upon the Woolf engine. He found at the outset that it gave 106 HP when the steam jacket was used, and only 82 HP without. In another trial the same figures were obtained. When working steam jacketed at a pressure of 3¾ atmospheres, the engine gave 104 HP; without a steam jacket, the diminution of power was 24½ HP, or a loss of 23½ per cent. Against this it might be urged that the steam in the jacket being hotter than the steam in the cylinder, the outside walls must part more rapidly with their heat, and this was probably the reason why the use of the jacket had hitherto been neglected. In the larger engine, with a steam jacket pressure of 3¾ atmospheres, the quantity of water per stroke was 5½ per cent. of the total weight of steam used; without a jacket, other conditions being the same, it passed to the condenser.

Hirn considered that the jacket dried the steam, and afforded time for the evaporation of the water carried with it from the boiler. The economy could not be wholly referred to the increased pressure of the expanding steam, caused by the jacket, although Hirn perceived that the two were in some way connected.

The next points to determine were 1.—The proportion between the pressures and the volumes of the steam at its maximum pressure, when still communicating with the boiler. 2. The same proportion when the steam was separated from the boiler, and expanded without addition of heat. 3. The same proportion under the same circumstances, but with heat added to the expanding steam.

The proportions between the pressures and the volumes were not found to agree with the theoretical values given in the Tables. In experimenting with the Woolf engine Hirn observed that a kilo. of water yielded nearly $\frac{1}{6}$th less steam in practice than in theory, and when passing from the smaller to the larger cylinder, the pressure fell from $3\frac{3}{4}$ to $1\frac{1}{2}$ atmospheres, instead of to 3 atmospheres. Part of this loss must be attributed to the impossibility of equalising instantly the pressure in the two cylinders, yet when a jacket was used, the pressure in the larger cylinder fell only to 2 atmospheres. If the reason of this difference could be discovered, it would probably account for the advantage of the steam jacket. Evidently there was a decrease of pressure during expansion, which caused the steam to occupy less space than it was supposed to do, and partial condensation took place. This fact Hirn verified by repeated experiments. When a jacket was used, it prevented this condensation, and arrested the contraction of the volume of steam. As a consequence, there was no sudden diminution of the pressure during expansion, and a gain of 23 per cent. was the result. The heat taken from the jacket to produce these good effects was so small a fraction of the total heat, that practically, the increase of power obtained by expansion without loss by condensation, cost little or nothing.

That the jacket acted directly upon the temperature of the steam was also proved, by testing the heat of the steam passing into the condenser. With a jacket the temperature of this steam was found to be higher than without, and the pressure in the large cylinder was also higher. These experiments were made on the Woolf compound engine. The water deposited in the jacket proceeded from three sources; first, that brought with the steam from the boiler; secondly, that condensed by the colder outer walls of the jacket; and thirdly, that condensed in

heating the inner cylinder wall. According to Hirn's calculations the economy of fuel resulting from the use of the jacket was 22%.

From these experiments he deduced a series of propositions, all of which he verified practically. The first was that steam, when passing from its maximum to a lower pressure, is always at a higher temperature than that corresponding to its actual pressure. Whether a jacket be used or not, the pressure is always less than is due to the temperature of the steam. Secondly, when steam at its maximum pressure is allowed to expand, part of its latent heat disappears. To explain this apparent anomaly, Hirn adopted a new and valuable method of experiment, and succeeded in calculating the exact number of calories developed in the work of a steam engine; in other words, he was able to reckon, how much heat went into, and how much came out of, the engine. This he called the Heat Balance Account of an engine, and this method, originated by him, is now universally used. To determine the heat sent from the boiler to the engine was comparatively easy, but it was more difficult to ascertain how much heat came from the cylinder, and until this was known, no practical and reliable theory of the steam engine was possible.

Three careful sets of experiments were undertaken. (I.) With the Woolf engine without steam jacket; (II.) With the Woolf engine with steam jacket, and (III.) With the single cylinder engine without a jacket. In each case prolonged trials were made, all the data noted, and also the heat passing in and coming out of the engine. It was found that a certain number of Heat Units disappeared per stroke, and this Hirn attributed to loss by expansion, or loss by condensation of the steam. He also confirmed his second proposition, that a part of the latent heat of steam disappears during expansion. When no jackets were used, a smaller number of T. U. were lost by the single cylinder than by the compound engine.

The third proposition he deduced was that steam, if gradually condensed at the same pressure, gives back during re-evaporation all the heat it had absorbed. If the heat entering the boiler, and coming from the condenser, in a non-expansive engine were measured, they would be found equal. In his experiments the number of expansions were 4 in the Woolf

engine, and 2½ in the single cylinder engine; the loss of heat was one-fourth more in the first than in the latter case.

The verification of the Mechanical Equivalent of heat in these trials afforded another confirmation of Hirn's argument. The number of kilogrammetres per calorie was 148 in the Woolf engine when jacketed, and only 99 in the same engine, non-jacketed, or about 50 per cent. more in the one case than in the other. These figures are much lower than Joule's or Meyer's. Hirn attributed the discrepancy to the fact that their Mechanical Equivalent had reference only to permanent or perfect gases, and did not apply where any change took place in the substance of the bodies acted upon. Such a change was certainly produced in the steam engine, since he had proved that steam, when expanding, was partially condensed. As the additional heat imparted by the jacket to the steam during expansion, did not wholly prevent this condensation and loss of power, Hirn began to consider the possibility of superheating the steam, and thus raising the performance of the engine to Meyer's figure of 370 kilogrammetres per calorie.

If steam at a pressure of 5 atmospheres enters a cylinder and falls to 3 atmospheres, its temperature will not (as we have seen) be that corresponding to such a pressure. Being slightly superheated, it will expand more freely, occupy a larger volume, and less steam will be required to perform the same work, than if saturated steam at 3 atmospheres be used. In a steam jacket, Hirn considered it of especial advantage to keep the steam in the jacket at high pressure. The ratio of work due to every addition of heat increases so much, that even the heat generated by the friction of the piston is of value, and more than counterbalances the greater power required to overcome the resistance offered.

The question of superheating steam next engaged Hirn's attention. Every practical student of the steam engine should always aim at economising the combustible, and increasing the efficiency of the motor, and both these results might, in his opinion, be obtained by the use of superheated steam. In the experiments he undertook, the same engines were employed as before. The superheating apparatus consisted of a number

of horizontal cast iron pipes, heated by the gases from the boiler. By opening and shutting a valve, the steam could either be turned into this superheating apparatus, or sent to the cylinder in its normal condition. Superheated and saturated steam were used on alternate days. Each experiment lasted a whole day, the pressure was constant throughout, and no jackets were used. These experiments were made about the year 1856.

The following Table gives a summary of the results :—

I. Experiments with the Woolf Engine. Steam pressure, 3¾ atmosphers = 55lbs.

Steam superheated 67° C. = 152° F.	Saturated steam.
Steam consumed per stroke 0·81lbs.	Steam consumed per stroke 0·90lbs.
Indicated horse-power .. 107.	Indicated horse-power .. 102.

II. Single Cylinder Engine. Steam pressure, 3¾ atmospheres

Steam superheated 87° C. = 188° F.	Saturated steam.
Steam consumed per stroke, 0·75lbs.	Steam cousumed per stroke . one lb.
Horse-power 110.	Horse-power 100.

III. Single Cylinder Engine. Expansions, 6. Pressure, 4¼ atmospheres = 66lbs.

Steam superheated 91° C. = 194° F.	Saturated steam.
Steam consumed per stroke, 0·83lbs.	Steam consumed per stroke, 1·07lbs.
Indicated horse-power .. 128.	Indicated horse-power .. 102.

These figures proved that the economy of this superheating with the Woolf engine was 20 per cent.; with the single cylinder engine, when the steam was superheated to 188° F., 31 per cent., and with the same engine with 194° F. superheating, 47 per cent.

Having shown that the action of the steam jacket consisted in preventing condensation, and increasing the volume of steam and the pressure, Hirn argued that if before expansion the steam is charged with a still greater quantity of heat, this beneficial action must be even more strongly marked. The advantages obtained by superheating may be summed up as follows: I. Evaporation of the water contained in the steam. II. Increase in the volume of steam. III. Modification of the laws connecting the volumes and pressures of the steam.

I. The first function of superheating is to evaporate the water carried in the steam from the boiler. Since however the amount of water in the steam during Hirn's experiments was

only about 4 or 5%, and the economy effected by superheating ranged from 20 to nearly 50%, it could not, he considered, be wholly attributed to the evaporation of this insignificant quantity of water. Superheating would appear to act rather by diminishing the amount of steam required to perform certain work.

II. The phenomenon of expansion by heat, although manifested to a certain extent in all bodies, solid, liquid or gaseous, varies greatly, but all gases expand in proportion to their temperatures. According to Gay-Lussac's law, steam above 275° F. (a pressure of 3 atmospheres) becomes a perfect gas, and dilates with every increase of temperature. Therefore as it passes through the superheating apparatus, and becomes heated, it expands, and this process only ceases when no more heat can be imparted. As in expanding, superheated steam occupies a larger volume than saturated, a smaller quantity must pass out at one time, the speed and pressure being the same, and hence a real economy of steam is effected. In the Woolf engine, when superheating was employed, the economy of steam per stroke was 8·7 per cent. The increase in the volume was 1·09. In the single cylinder non-jacketed engine, the economy of steam per stroke was 19 per cent. The increase in volume was 1·24. The reason of the greater apparent economy of the single cylinder engine is that, owing to the jacket, the thermometer used in the Woolf engine did not show the real temperature of the steam.

But did this economy of steam represent an equal economy of fuel? Hirn answered this question affirmatively by his new method of measuring, not the quantity of coal consumed, but the actual number of T. U. developed.

Having thus determined the economy of fuel, the next question was, why an increase in power of only 5 HP was shown in the Woolf jacketed engine, when the steam was superheated. Although the single cylinder engine was under the same conditions, whether superheating were employed or not, except as regards the jacket, and the pressure and the dimensions of the valves and passages were the same, yet the steam being more rarified, its density was less, and through the same orifice, a larger quantity passed into the cylinder than with the Woolf engine. The pressure in

the cylinder was consequently higher, and the back pressure to the condenser less. Not only was there a greater increase of HP with superheating, but the gain in power obtained with a non-jacketed, was greater than with a jacketed engine, in this particular case.

It was during these experiments that Hirn's attention was drawn for the first time to another phenomenon, affecting the internal working of the steam engine. He had for some time suspected, and was among the earliest observers to establish, the great influence of the walls of the cylinder upon the steam. Repeated experiments showed that they must be considered as reservoirs of heat. "The influence of these walls," he says, "is such that they completely modify the so-called natural properties of the steam, and none of the laws having reference to steam considered in itself can be applied, without correction, to the theory of a steam engine." From hence he deduced a fourth reason for the advantages obtained by superheating steam, namely that the walls of the cylinder become themselves hotter, and exercise so beneficial an influence on the steam as it expands, as actually to modify the law of expansion. Since however the results varied with each type of engine, he desired to test the effects of superheating on five different kinds of motors.

1. Double cylinder non-jacketed engine. With saturated steam, a loss of 25 HP was occasioned by the absence of the steam jacket. With superheated steam the increase in power was 7 HP. The smallness of this gain he attributed to the loss of heat and power, due to the cooling action of the walls of the larger cylinder, which were not affected by the superheating. The same result, though to a less extent, applies to the

2. Double cylinder jacketed engine. Hirn had already maintained that, other circumstances being equal, where superheating was employed, a double cylinder jacketed engine was superior to a single cylinder engine without a jacket. In the experiments he undertook with engines of this class, the economy of steam, due to superheating, was 20 per cent.

3. Single cylinder non-jacketed engine. Here the great influence of the action of the walls was more marked. The density of the steam in the cylinder corresponded to a pressure of 1¼

atmospheres, and it contained 23 per cent. of water. This large percentage could not all have been brought from the boiler; part of it must, he considered, consist of water condensed against the walls. With saturated steam, 18% of steam went to heat the walls, and was condensed as water. With superheated steam no water was produced in the cylinder, but the cooling influence of the walls caused the steam to become denser, even while expanding. With steam superheated 194° Fahr., the engine gave 128 HP, instead of 102 HP with saturated steam.

4. Single cylinder jacketed engine. Hirn was not able to obtain an engine of this description to work upon, but he calculated that in such a case superheating would only modify slightly the power given by the engine.

5. Non-condensing expansive engines. These may be divided into two kinds, where the steam escapes into the air, and where the steam is utilised for other purposes. Hirn does not appear to have made any experiments upon this class of engine.

His new and original method of establishing a balance of Heat enabled him to take into account the heat of every part of the engine, and even to reckon that developed by the friction of the piston rings. The work consumed by the piston of a motor he estimated at 5 per cent. of the whole. This percentage is due to the heat generated by the piston, which passes into the steam, and helps to increase the work done.

From the foregoing examples Hirn proved that where superheating was employed with a steam jacket, the advantage was greater with a single cylinder than a double cylinder engine. The former consumed one-fifth more saturated steam than the latter, while both required about the same quantity of superheated steam. Thus superheating establishes a kind of equilibrium between the two types of engine, to the advantage of the simpler motor.

On the following points, however, Hirn was still in doubt; whether Joule's figure of 417 kilogrammetres per calorie were a constant, or varied according to the class of phenomena to which it was applied; whether the mechanical work corresponding to the calories developed is produced directly or indirectly; and lastly whether this law of Thermo-dynamics was a manifestation of one primary principle, or in itself

represented a new and separate force. To the solution of these questions he next devoted himself.

CHAPTER III.

Heat proved to be a separate force.—"Théorie Mécanique de la Chaleur."—External and Internal Work.—Saturated or Superheated Steam; Laws governing the action of Gases.

These practical investigations had been undertaken to elucidate the great primary laws of nature. It was not, however, till 1857, after making his third series of experiments on superheating, that Hirn was in a position to answer the abstruse questions that were agitating the scientific world. His labours, extending over more than 10 years, were at last beginning to attract attention, and others sought to verify the accuracy of assertions so startlingly at variance with the received opinion of the day.

The basis of all his studies was heat, its laws and principles. To those who maintained that heat, light, electricity, were all manifestations of one primary force, he was now able to reply that this was not the case. Each was a separate force, capable of being transformed into another, but none could be destroyed. "The heat," he says, "which appears or disappears in any phenomenon is neither created or destroyed; it is modified in its manifestations. The moment it causes movement, it ceases to reveal itself as a principle of heat, because it cannot manifest itself at the same time in two different ways."

Heat is capable of counterbalancing some other force, in any body to which it has communicated its properties. From an economical point of view, therefore, there is no gain in replacing one force by another, as heat by electricity, and this rule Hirn illustrated by various examples.

His experiments and conclusions were summed up in his masterly work, "Théorie Mécanique de la chaleur," published in 1862, in which he treated the subject of Heat theoretically, philosophically, and practically. Although much in this book deals with abstract science, with which the present sketch is not concerned, no account of his work would be complete without a short summary of the principles it contains. These may be

passed rapidly in review, because many of his experiments had been previously given to the world in his shorter papers.

The Theory of the Mechanical Equivalent of Heat, and the science of Thermo-dynamics evolved from it, were established by this time on a sound experimental basis. The importance of the law was fully recognised as forming the link between physics and mechanics, but it still needed to be verified.

Hirn began by laying down the proposition that Thermo-dynamics did not require an exact definition of Heat in itself, but only of the proportion of heat to work done, in solids, liquids, and gases. This proportion was evidently a constant; the reason why the mechanical coefficient varied was, because the exact figures forming the basis of calculation were not accurately known. From the numerous experiments he had already published, Hirn felt himself justified in deducing three propositions. I. Heat disappears whenever a force acting outwards from within a body produces external work. In like manner heat is produced whenever a force acts from without upon a body. II. The heat lost or gained is always in proportion to the work done on or by the body (internal or external work). III. A constant relation exists between these quantities of heat, and the quantities of work produced.

I. The first proposition he had already amply illustrated in its effects on friction, disintegration of solid bodies, compression and expansion of bodies, and especially of gases. If a body be compressed, that is, if pressure be brought to bear on it, heat is evolved, and it becomes hotter; but if, after compression, it is allowed to resume its original volume, no work is performed, and the body cools.

Heat was next considered in the effects it produces by changing the shape of bodies, elasticity, the contact of two substances, heat of thermal motors, electro-magnetic machines, animals and human beings. To prove that the latter were subject to the same heat effects as inorganic bodies, he made many curious and interesting experiments on himself and other people. These he amplified later; indeed, through life, the subject had a curious fascination for him. The following example will show his line of argument. Each gramme of oxygen introduced into the human body represents about 5 calories. Now, if a person

when at rest, assimilates 80 grammes of oxygen per hour, they will produce about 150 calories. If he ascends a staircase steadily and regularly, his quickened respiration will cause him to assimilate, say 150 grammes oxygen, representing 750 calories in a state of repose, and 700 calories when in action. If he goes down a staircase, and assimilates the same amount of oxygen, there will be an increased manifestation of heat equal to 800 calories.

II. The second proposition brought Hirn back to the phenomena of steam motors. The chief type representing the connection between heat and work was the steam engine. That there was a relation between the heat developed, and the work performed, was admitted by all scientific men, but they were not yet prepared to allow that the proportion between the two was fixed and invariable. It was still thought that the abstruse problems presented by steam motors could not be solved by so simple a law. Hirn maintained that these were questions of fact, which could only be determined by collating a large number of experiments made by independent observers.

In the steam engine the motive power was heat. Hirn's method of striking a balance of this heat enabled him to determine with certainty that, under whatever conditions a steam engine worked, with or without expansion, with variable or the same pressures, superheated or saturated steam, there was always an exact proportion between the work performed, and the difference between the heat going into, and coming out of the cylinder. Thus, in a steam engine, let the boiler pressure be maintained constant at five atmospheres = 75lbs., the temperature of the superheated steam at 482° F., and the boiler HP at 100, with six expansions. As long as the admission valve is fully open, the steam pressure in the cylinder will be nearly equal to that in the boiler. If the admission valve be one-third closed, the pressure in the cylinder will no longer be five atmospheres, because the steam is throttled, and the expansions will fall to three. Therefore, to prevent a decrease in the HP, 300 grammes of steam will be required instead of 200, for since one-third more resistance has to be overcome, one-third more steam must be supplied. Now if there is a law of proportion between the heat furnished and the work done, the one-third more heat

contained in the steam should be found in the condensing water.

To verify this assertion, Hirn experimented on two single cylinder condensing engines, a large and a small one, with superheated steam and variable expansion, one running at 93, the other at 27 revolutions. The conditions were uniform, except that in one case, the admission valve was open, and in the other partially closed. The result showed that a law of proportion governed the heat and work in a steam motor.

III. In his third and last proposition he sought to determine the value of this proportion, *i.e.*, the numerical basis of the Mechanical Equivalent. This could not be obtained from a steam engine, because of its complicated mechanism; but it appeared to Hirn that, if the correct value were arrived at by other means, the performance of a heat motor might be accurately calculated from it. With this object he undertook four kinds of experiments, first on the friction of liquids (a subject he had already treated); next on the flow of water under great pressure. The water was raised 1·0457° in temperature, and a weight of 452·8199 kilos fell 1 metre, or 1 kilo. from a height of 452·81 met., giving $\frac{452{\cdot}8199}{1{\cdot}0457} = 433$ as the mechanical equivalent. The third test was on the fall of solids, and lead was selected as a typical example. A heavy iron ram descended vertically upon a block of iron. Between the two a piece of lead was interposed, and the height of recoil calculated. The weight of the ram crushing the lead was represented by 280 kilogrammetres; the heat produced was equal to 0·65 cal., or $\frac{280}{0{,}65} = 425$.

The fourth experiment was on the expansion of gases or highly compressed air, and the mechanical equivalent was 441·6. This value is probably too high, because air is always slightly heated by the mere act of compression. It will be observed that these figures were much higher than those formerly obtained. The results were:—

1. Crushing of lead.	Mechanical	Equivalent,	424·5	kilogrammet's
2. Friction of liquid,	,,	,,	432	,,
3. Fall of water,	,,	,,	433	,,
4. Expansion of gases,	,,	,,	441·6	,,

The number 432 appeared to him the most correct, but other writers fixed it at 425.

Hirn divided all the heat contained in bodies into 8 classes. I. Heat employed to surmount external pressure, in other words, to perform external work. II. Heat used to overcome resistance within the body, or to perform internal work. III. Heat modifying the temperature of a body, or its calorific power. By varying the quantity of work performed and of heat added and subtracted, he proved that an exact proportion exists between heat and work. He found that "the differential volume of the body, and the total external and internal pressure, are continually dependent one upon the other, and connected by certain laws." This rule was the same for all bodies, if the temperature was equal. The mechanical theory of heat comprised the phenomena relating to external work, and the heat thereby developed, and the phenomena of internal work, or heat within the body. In all bodies their total volume, the external pressure and the temperature, are so closely connected that, if two of these attributes be given, the third can be deduced with certainty from them.

There are four different ways in which heat can be applied to bodies. I. Where the body receives a certain quantity of heat, and expands, remaining at the same temperature. II. It expands without the addition of heat. III. It contracts, and the heat thus set free is withdrawn. IV. It contracts without the withdrawal of heat. All these phenomena are presented by saturated steam, superheated steam, gases and liquids. The maximum pressure of saturated steam is entirely a question of temperature. For different liquids, the pressure exactly corresponding to each degree in temperature had been determined by Regnault, but Hirn wished to discover the law underlying this relation of heat to pressure, in other words, the total amount of heat contained in any liquid, and that required to evaporate it. With this object he experimented upon saturated steam, vapour of sulphuric ether, and vapour of sulphuret of carbon, selecting these substances, because of the great differences in their chemical composition and properties. The number of heat units required to evaporate 1lb. of each, and the corresponding pressure were ascertained.

From these considerations Hirn passed to the more practical question of the amount of heat necessary to perform a given amount of work in a steam engine. He had already discovered, independently of Clausius and Rankine, that steam when expanding, and by reason of its expansion, condenses, and thus decreases in temperature. Hence the utility of adding heat to it during or before expansion, either by superheating, by a steam jacket, or by both. Sufficient attention had not, in his opinion, been paid to the quantity of water, mixed with steam, passing from the boiler to the cylinder. In a trial of steam boilers made at Mulhouse in 1859, it was found that although the quantity of steam evaporated in the different boilers per lb. of coal varied from 6¼ to 8lbs., the amount of combustible required for working the engine scarcely varied at all. This he attributed to the different quantities of priming water carried into the cylinder with the steam from different boilers.

Formerly a difference was made between gases, and steam or vapour, which does not really exist. They vary in degree, but not in kind, according to the greater or less quantity of heat in them. Gases superheated beyond saturation point, and which it has not yet been found possible to condense, are called permanent gases. To superheat steam, therefore, transforms it for the time into a permanent gas, and makes it subject to the laws which govern the constitution of gases. If with superheated steam the pressure is allowed to fall rapidly, it is reduced to the condition of saturation, but the coefficient of expansion varies with the temperature, instead of being a constant, as had hitherto been supposed.

The following phenomenon proved that the same laws would not apply to superheated and saturated steam. If saturated steam at a pressure of 10 atmospheres fell to 1 atmosphere, its temperature decreased from 356° F. to 304° F., or a difference of 52°, but if it was superheated 148° F., its temperature, with the same loss of pressure, fell only to 434° F., or a difference of 34°.

Another general law formulated by Hirn was that "the total potential work of any body is exclusively proportional to the absolute temperature of that body, and is represented by the heat set free in it."

It was while investigating the nature of gases that Joule made his great discovery, and the subject possessed deep interest for Hirn, though it scarcely attracted him as much as the equally important question of steam. He proved that the more a gas is rarified, and the further removed from its point of liquefaction, the more exactly it will obey the general laws that govern the action of gases. The greater the expansion of the volume of gas in proportion to the temperature, the less will be the internal pressure. The subject, however, was still too imperfectly understood to formulate a theory concerning it. To do this, Hirn found that it would be necessary to know what amount of spontaneous superheating took place in a gas when falling to 1 atmosphere from 2, 3, 4 . . . . . 100 atmospheres. To this question he afterwards reurned.

The other branches of the subject, those applying to liquids and solids, had been already studied by Zeuner, and Hirn had little to add to the researches of the German physicist.

CHAPTER IV.

Study of the Steam Engine and of the action of the Walls.—Condensation.—Contest with Zeuner.—Atomic Theory.—Calorific Force.—Molecular Attraction.

Hitherto Hirn had dealt only with the law of the Mechanical Equivalent, as manifested in steam, gases, liquids and solids. He now proceeded to apply his formulæ practically to thermal motors, and to set forth his experimental theory of the steam engine.

It is, of course, impossible that any machine can, under any conditions, give its maximum of work done for the heat received. The difference between engines with saturated and superheated steam, gas engines, &c., is simply that one kind approximates more closely than another to the theoretical efficiency. Nor can all the work be utilized or strictly proportioned to the heat expended, because of the imperfect conditions under which every engine works. Between the theoretical and actual work, or in other words, what Hirn called the "generic" and the "practical" efficiency of a steam engine there is a great difference, because the latter alone takes count of the friction

of the parts, and the range of working temperature. In spite of its defects, however, Hirn considered steam to be the best motive force, because it does not vary in temperature, except during actual work. Even its change of physical condition, from water to steam is of advantage, because the greater the range of temperature, the more work is performed.

A steam engine can be studied either theoretically or experimentally, or by combining the two methods, but in any case the phenomena it presents can only be examined externally. It may be divided into three parts; the cause of action or motive power; the working agent; and the moving parts, which translate the power into motion. All these are brought into play when the engine works, and it is as misleading to neglect the effect of the parts, such as the cylinder walls, piston, &c., on the final results, as to ignore the Force itself, Heat, or its intermediary agent, Steam. Such had been the case in what might be called the Generic theory hitherto adopted, and the beneficial effects of the steam jacket had consequently been ignored or denied. In gas motors the same error had arisen; the practical results had never been found to agree with the theoretical, partly because, in gas as well as steam engines, the influence of the cylinder walls had not been taken into account. It was reserved for the new Theory of the Mechanical Equivalent of Heat to set forth their action in its true light. Hirn had proved that the cylinder walls, piston, and other parts of the engine abstracted heat *from*, and returned heat *to* the steam, and it was therefore impossible any longer to apply the old theories. The more the subject was studied, the more complex it appeared, and Hirn even doubted if it were feasible to construct any exact or practical theory, which would apply to the varying conditions of a steam engine.

Until now he had attributed the beneficial effect of the steam jacket solely to its action upon the steam when expanding, but further experiments showed its influence upon the action of the cylinder walls. In the Woolf double cylinder engine, the gain must be chiefly attributed to the effect of the walls, which with a jacket were of a uniform temperature of 141° C., and without it at a much lower mean temperature. By careful experiment, he found that with a jacket the walls furnished

about half as much heat per stroke as in theory they should have yielded. Practically, therefore, half the amount of heat did the same work, because of the difference in the method of adding the heat. By taking the weight of the steam, and the proportion of water known to be in it, and calculating the expenditure per stroke, he found that the quantity of steam condensed during admission was, in a small engine, 60 per cent. of the total amount, and 30 per cent. in a larger engine. No part of this loss was due to leakage; it was due to condensation against the walls. No more conclusive proof could be given of the futility of calculating the expenditure of steam in an engine, and neglecting the influence of the walls. Upon these facts Hirn based a most important law, now generally accepted, namely, that when steam is introduced into a reservoir of fixed dimensions, the walls of which are not of the same temperature throughout, the final tension of the steam corresponds to the lowest temperature.

Hirn seemed to divine by intuition what was the effect of the temperature of the cylinder walls upon the steam. Not only was he one of the first to notice it, but he was able to describe in detail what he had no opportunity of actually testing. There were some who, while admitting the influence of the walls, held that the change of temperature, and consequent varying phenomena of the steam in the cylinder, were due to a propagation of heat through the whole mass of steam. But Hirn maintained that the steam in actual contact with the walls was most affected; that the walls, which were previously at a lower temperature than the steam, took heat from it, and then becoming hotter, restored this heat to the steam during the expansion and exhaust stroke. This statement has been confirmed by recent researches.

These experiments caused him to alter his opinion that the benefit of the steam jacket was in its action on the steam while expanding, and attribute the economy obtained chiefly to its effect on the walls. Without a jacket, 27 % of the heat was sent on to the condenser in pure loss; with a jacket the loss was only 5 %, and this great economy was obtained at very little cost.

Other trials made with superheated steam at 448° F. showed that the temperature of this steam fell during expansion to

298° F. This was attributed to the action of the walls, which reduced, not the whole mass of steam, but only that part in contact with them, to a lower temperature. Nearly two-thirds, however, of the heat taken from the steam was restored to it by the walls, to evaporate the water covering them.

It is this phenomenon of condensation, with its ceaseless fluctuations, which constitutes the main difficulty in calculating the work of an engine. To determine the extent to which condensation takes place during the varying phases of a stroke, the science of Thermodynamics is of great value. Nothing affects condensation so much as the action of the cylinder walls, and so impressed was Hirn with their influence, that he actually considered a very thin internal portion of the walls as having the same temperature as the steam and water in contact with them. The action of the jacket consists in diminishing the quantity of heat taken from the walls during exhaust, and in increasing the heat expended in the work of expansion. Superheated steam has the same effect, but with this further advantage, that the steam itself brings the heat needed for expansion, and the quantity of steam condensed during admission and re-evaporated during exhaust is considerably diminished. In a double cylinder engine Hirn found that, with a steam jacket and superheated steam going through it, the economy was 12 or 15%, due to superheating. With superheated steam without jacket, the economy was about 8 or 10%, as compared with saturated steam and a jacket.

Many years later, in 1887, Hirn had occasion to return to this subject. One of the cardinal doctrines he had spent his life in establishing was denied by Clausius, who declared that it had not yet been proved that the effect of the cylinder walls was of sufficient importance to be taken into account. It was impossible for Hirn to remain passive, when the result of his scientific investigations was thus ignored. He stepped at once into the arena of controversy, and maintained that this wall influence was exceedingly powerful, and had been repeatedly verified. As usual, he supported his statement with numberless experiments. In an expansive condensing engine without a jacket, the following phenomena were revealed. I. Difference between the boiler pressure, and the pressure in the cylinder

during admission. II. More or less condensation of steam during admission, and an expenditure of steam from 10 to 40% greater in practice than by calculation. III. A difference shown by the indicator, during expansion, according to the heat added or not to the steam. IV. Variation between the calculated and the actual quantity of work done. V. Correspondence between the quantity of heat and the total work.

If the cylinder is jacketed, the first four phenomena are greatly modified. With the same expenditure of heat, there is from 10% to 35% more work done. Hirn maintained that this was due to the action of the cylinder walls; Zeuner considered that it proceeded from the water constantly present in the cylinder, which alternately absorbed and restored the heat brought in the steam. The existence of this water was strenuously denied by Hirn. He argued that when superheated steam is admitted into the cylinder, and falls to saturation point, it loses instantly its excess of heat. Yet there is no water in the cylinder to explain this cooling; it must be due solely to the walls. Again, the covers of the cylinder had been proved to be always about 86° lower than the temperature of the admission steam. How could this difference be accounted for, unless the walls yielded heat during expansion and exhaust? Finally, Hirn observed that whereas the consumption of steam, about the year 1847, was reckoned at about 26lb. per I. HP per hour, and sometimes as much as 35lbs.; it was in 1887 about 22lbs., and occasionally as low as 17lbs. This gain he attributed partly to the greater attention paid by engineers to keep the cylinders hot, and prevent as far as possible, loss of heat by radiation from the walls and steam passages.

No one had contributed more to this satisfactory result than Hirn himself, by elucidating the principles of working a steam engine. A perfect motor, he explained to be one forming a closed cycle, in other words a machine which, after going through a definite sequence of operations, returns to its original conditions. The closer any engine complies with these conditions of a perfect motor, the better it is, whatever the working agent employed. A comparison of steam and gas engines illustrates the proportion existing between heat and work. In Hirn's opinion, this proportion was higher in a steam motor; but the

action of gas engines was too imperfectly understood at that time, to study properly their working conditions.

The mechanical theory of Heat admits of a division under two heads, the first having reference to the action of external, the second to that of internal heat in any body. The external action of heat had already been carefully studied by Hirn and other scientific men, but little was known of its internal effect, the combination and disintegration of the chemical constituents of a body, and the internal changes taking place during and after its change of temperature. This was set forth in the second half of his "Théorie Mécanique de la Chaleur." All bodies, he maintained, possess a certain invariable calorific capacity. This calorific capacity, or specific heat, is not the heat developed by external or internal work; it is the heat inherent in the body, plus the heat generated by work. Temperature is the intensity of the calorific force in any body. So long as the heat is employed in modifying the temperature, every increase of temperature corresponds to the quantities of heat added to or taken from a body. Dulong had laid down the principle that the product of the atomic weight of any body, found by calculating its calorific capacity, is a constant; and this law Hirn applied to iron, copper, silver and lead.

To ascertain the number of atoms composing a body, and to study its internal properties, the mechanical theory of heat is of the utmost value. For if the absolute capacity of any simple body be known, it can not only be calculated for other bodies, simple or compound, but the exact value of the internal work performed by that body, when heated or cooled, can be determined. The quantity of heat needed to raise the temperature of a body 1° is in proportion to the atoms composing the body, and not to its properties. These facts establish the existence of separate, indivisible atoms, in other words, of the indestructibility of matter. For instance, the absolute calorific capacity of water is 0·04. If we call 1 the total quantity of heat needed to raise 1lb. of water 1°, the quantity of heat which really modifies the temperature is only 0·06 or $\frac{4}{10}$ths of this. The remainder of the heat is expended in external work or expansion. This percentage is the calorific capacity, and varies with each substance, being much less with ice than water, (only $\frac{1}{10}$th).

In solid bodies, at the same temperature, an exact proportion has been found to exist for every increase of 1°, between the atomic weight of the body and the internal work, or heat absorbed. As the calorific capacity of bodies is a constant, so also is the coefficient of expansion. If both of these are known, the proportion in which the heat of a body is employed can also be determined, as well as the number of atoms constituting the body, the form of the molecules of which the atoms consist, and the intensity of the force acting upon them.

Regnault had shown that at constant pressure, the calorific capacity of air and of hydrogen is constant, while that of carbonic acid varies, and Joule had demonstrated that where the pressure of carbonic acid is reduced from 5 atmospheres to 1, less cooling takes place (*i. e.* less internal work is performed) the higher the initial temperature. These propositions were carefully verified by Hirn, who explained the various anomalies presented by internal heat in gases by the fact that, in some cases, the internal work performed is negative instead of positive, and heat is evolved instead of being absorbed.

These considerations of internal pressure, work, and heat were intimately connected with the question of the atomic indivisibility of bodies, and the indestructibility of matter. It had formerly been held that temperature could be infinitely lowered. If this were so, as, by reason of the coefficient of expansion or contraction, bodies were reduced in volume in proportion to the lowering of their temperature, the material volume of bodies would be reduced to nothing. In other words, matter could be destroyed. The limit of absolute zero had however already been determined at 273° C. below zero, and Hirn verified it by his investigations of heat. Since bodies could not be reduced below a certain volume or temperature, no body could disappear, and all matter therefore must consist of an aggregate of infinitesimally small, but irreducible atoms. It was known that a certain hitherto undetermined law regulated the proportions between pressures, temperatures and volumes. Since the law itself could not change, Hirn argued that the variations must be caused by perturbations, and if molecular attraction was not sufficient to account for the latter, the pressure cannot decrease as rapidly in proportion

to the diminution of the volume as had hitherto been supposed. Nothing would explain this except the phenomenon of internal work, which is caused by the reciprocal attraction of atoms, and their tendency to cohere, where there is a change of volume.

In 1866, Hirn, in conjunction with M. Cazin, carried out a series of experiments to determine the law governing the expansion of gases, and superheated steam. The external and internal pressures (calorific force) of water, sulphate of carbon, and bichloride of carbon were verified at temperatures varying from 122° F. to 352° F. He proved by these trials that liquids and solids as well as gases expand under pressure, if heat be applied to them, a fact which had long been disputed, but, with all his researches, he was unable to formulate the exact law of proportion connecting the temperatures and the pressures of any body.

One of the most powerful causes which affected the constancy of this law was molecular attraction. The cohesion of the atoms composing a body had long been confounded with chemical affinity, but was in reality distinct from it, though intimately connected; the former was independent of external pressure, the latter was affected by it. Chemical affinity has nothing to do with the physical condition of the bodies in which it acts. In chemical combination and decomposition, electricity is always manifested; it is also developed in the production of steam, but the quantity is so small that it may be neglected. It had long been thought that the force of cohesion, or molecular attraction, was non-existant in gases and liquids, but Hirn's experiments with steam proved that this was not the case. With saturated steam at 212° F., he found the value of the reciprocal attraction of the groups of atoms to be equal to 0·10 atmosphere.

Not content with studying internal pressure in its relation to steam, Hirn examined its effect on electricity, where it is also undoubtedly present. A certain tension is necessary to generate electricity, which is, like heat, a force, and the quantities are necessarily proportioned to the pressures. Electricity is governed by the same law as heat, and as electrical energy diminishes, it is replaced by its mechanical equivalent of heat. Nor can the vital constituent force be utilized, and yet remain intact, in electricity, any more than in heat. Tension stands to

electricity in the same relation as temperature to heat, and at each point of the current it may be called the electrical temperature. A remarkable analogy appears to exist between the laws governing thermal and electric phenomena, and the same rule applies to chemical affinity; the heat developed being a consequence of the work done, by the approach of the several heterogeneous atoms.

CHAPTER V.

Human Thermodynamics.—Vital Heat of the body.—Experiments on the amount of Heat developed by human beings when in action.—Measurement of Oxygen inhaled.—Respiration shown to be the principal source of Heat.

At this point a natural break occurs in Hirn's labours. Hitherto he had considered the Law of the Mechanical Equivalent of Heat in its practical application, and especially in its bearing on the steam engine. During the latter years of his life he was mainly occupied in investigating the inner principles governing Nature and the Universe. He had helped to establish the science of Thermodynamics on a solid experimental basis; it remained to apply its laws to abstract, as well as to concrete facts.

A minor division of the subject first engaged his attention. One of the propositions he laid down and frequently insisted upon was, that a great principle of unity runs through all nature. Since humanity is a part of the universe, he saw no reason why we should ourselves be exceptions to the principle, and maintained that our bodies are governed by the same laws as inanimate and inorganic nature. Acting upon this hypothesis, he made a bold and successful attempt to apply the formulæ of Thermodynamics, and the Law of the Mechanical Equivalent of Heat, to human beings. This interesting study he founded on Lavoisier's discovery that the act of respiration has for its object to furnish living organisms with oxygen, and thus to produce a kind of internal combustion, which is probably the principal source of animal heat. All the experiments hitherto made to determine this vital heat had, he considered, failed, because the subject of the test was placed in such painful and abnormal conditions that

no really satisfactory results could be obtained. He proposed to avoid this difficulty by making experiments on human beings, under circumstances corresponding as nearly as possible with the ordinary conditions of daily life.

Heat in our bodies, he argued, has the same cause as in other motors. Strictly speaking, organic Physics or Mechanics do not exist; the phenomena they present in human beings are the same as in Nature. Now the first principle in any motor is that, when the act of motion is ended, and the sequence of operations concluded, the motor returns to its original condition, otherwise the action is not final, and cannot be repeated. This Hirn had already explained when speaking of a perfect cycle, and the law is as clearly shown in human as in steam motors. When we raise a weight to a given height, heat is developed in our bodies, withdrawn from the heat generator, and sent through the system. When we drop the weight, and our muscles return to their original condition, so much heat is restored to our heat centre. Now when a given weight is lifted, it is not sufficient that the muscles of the arm, by the influx of the nervous fluid, should become rigid. The dynamic principle called into action, and the weight raised, the muscles must expand to release and deposit it in its place, and this expansion means the cessation of the nervous influx, and the return of the motor—in this case the arm—to its original condition. Exactly the same thing happens when, in an engine, the compressed steam which raised the piston is released or condensed. Such a delicate adjustment of the executive force is easily obtained in the human organism, but it can only with great difficulty be secured in inanimate motors. In human organisms, motion may be divided into positive work, as when we lift a weight or ascend a mountain, and negative work, when we lower a weight or descend a mountain. In the one case mechanical force is expended, in the other it is absorbed. There are few mechanical motors which answer to conditions so exact, and in Hirn's words, consume or give out mechanical work.

It is now an established principle of Science that forces are not transformed into each other, as was formerly supposed, but substituted for each other, and that an invariable relation exists between the Force which enters upon, and

the Force which ceases from a state of activity. This system of balance governs the Universe. For instance, if a waterfall turns a mill wheel, so much work is performed, and at first sight there seems no loss of heat. But a certain quantity of water is required for this work, and to supply the deficiency, that is to replenish the source of water above the fall, the heat of the sun evaporates the lower water, returning it again as rain to the stream that feeds the waterfall, and thus re-establishes the equilibrium. If nothing is produced, *i.e.*, no external work is performed, there will be no expenditure of heat, but whatever is produced must cost either power or heat, for Nature does nothing gratuitously.

To determine by experiment the amount of heat expended during outward action, or restored during negative work, in the human organism, it is necessary to know—I. The quantity of heat in the system when no work is performed, in other words, the normal heat of the body, and II. The heat actually evolved when doing a given work. The difference between these two factors will represent the heat consumed or expended, as a consequence of work performed. The method of experiment which Hirn had introduced with regard to the steam engine, he now employed to measure the heat passing into and out of the body. The main cause of heat in the human organism he found to be the oxygen introduced by the act of respiration. It is true that heat is also contained in the food and other substances assimilated, but the combination of oxygen with the chemical constituents of these alimentary substances is necessary to evolve their heat. If the quantity of heat measured is in proportion to the oxygen introduced into the system, it may be safely inferred, that respiration is, as Hirn says, the "essential cause of heat."

In 1856 and 1857, Hirn undertook two series of experiments to determine the factors mentioned above, *i.e.*, the heat existing in the body, and that evolved during and as a consequence of work. To know this, it was necessary to ascertain the relation between the act of respiration, and vital heat. In the first series, the persons experimented upon were in a state of repose; in the second, they underwent active bodily exertion. The method employed in both sets of trials was as follows:—

A wooden box or chamber, hermetically sealed, was placed inside a room, the temperature of which, indicated by a thermometer, was almost stationary. The inner experimental chamber was also furnished with a thermometer, and the air in it was constantly agitated, to maintain an even heat. Before the experiment, the degree of heat required to keep the temperature of the inner chamber uniform with that of the room, and prevent loss by radiation, was ascertained by burning a jet of gas. The quantity of gas used, and the time required to raise, by its means, the temperature of the inner chamber any given number of degrees, were known beforehand. The person to be experimented upon entered the inner chamber, the temperature of which had been carefully regulated, and seated himself in a natural position. The experimental chamber was then closely sealed, with the exception of one small opening, to admit air to replace that consumed by respiration. The operator placed an india rubber tube to his mouth, inhaled air through his nostrils, and exhaled it through the tube which communicated with a gasometer, where the products and air exhaled were carefully measured. When the gasometer was full, the operator put down the tube, and breathed freely into the chamber until the thermometer became stationary. The experiment was thus divided into three periods. I. A transitional period, lasting until the person experimented upon had reached a state of normal respiration and heat. II. A period during which the volume of air inhaled in a given time was measured, and III. A like period during which the quantity of heat developed in a given time was measured.

The Table on page 180 gives the results of the first series of experiments, with the age and physical condition of the persons tested.

From this Table three striking and important conclusions may be deduced. The first is that the volume of oxygen absorbed into the lungs, and of carbonic acid exhaled, are almost exactly the same. This phenomenon had sometimes been doubted by other observers, but Hirn's exact methods of measurement and calculation, and his analysis of the air inhaled and gases exhaled, enabled him to verify it beyond a doubt. The second fact was the very slight deviation in what he termed the calorific

Experiments made on Five Persons in April and May, 1857.

(State of Repose.)

Description of the individual.	Length of experiment	Average weight of person	Loss of weight per hour of person	Temperature		Volume of Air		Weight		Heat	
				of the air inhaled	inside the experimental chamber	inhaled per hour	exhaled per hour	of oxygen absorbed by the operator.	of carbonic acid exhaled by the operator.	in the experimental chamber	per gramme oxygen assimilated
	mins.	kilo.	kilo.	deg. C.	deg. C.	cubic metres	cubic metres	kilo.	kilo.	calories	calories
I. Man age 42, weakly, lungs in good condition. Pulse 80 per min.	90	61	0·065	12·10	15·50	0·719	0·719	0·028	0·032	125·8	5·27
II. Man age 47, robust and healthy. Pulse 60 per min.	90	73	0·070	19·50	23·30	0·607	0·607	0·027	0·037	140·6	5·20
III. Man age 42, strong. Pulse 85 per min.	78	85	0·077	14·30	18·90	0·557	0·557	0·032	0·045	170·2	5·20
IV. Man age 18, delicate	90	52	0·047	9·60	14·20	0·985	0·985	0·032	0·045	170·2	5·20
V. Young girl age 18, strong and healthy	60	62	0·056	14·20	18·40	0·767	0·767	0·030	0·042	155·5	5·02

1 kilo. = 2·2lbs. 1 gramme = 15·43 grains. 1 cubic metre = 35·31 cubic feet.

coefficient of the oxygen, or the proportion existing between the weight of oxygen assimilated, and the number of calories developed in a given time. The third conclusion was a logical deduction from these facts. It had been proved that one gramme of oxygen when combined with hydrogen to produce water developes 4·8 calories; when combined with carbon to produce carbonic acid, it developes 8·08 calories. In these experiments the heat developed in a human body per gramme of oxygen was invariably 5·2 calories, and hence it seems at first sight as if respiration was not the only active cause of heat. But the proportion between the heat evolved and the weight of oxygen absorbed give the reason of this difference, and Hirn drew the conclusion that the alimentary substances introduced into the body absorb heat during their formation, and restore it when combined with oxygen in our organisms.

The second series of experiments were undertaken upon persons in a state of action, and here Hirn applied with success the Law of the Mechanical Equivalent of Heat. By an ingenious arrangement, a kind of treadmill, he contrived to set in motion the person operated upon. A wheel placed in the experimental chamber was made to revolve from the outside. Below the axis of the wheel, and near the circumference, was a plank upon which the person stood, and from which he passed on to the rotating steps of the wheel. After a little practice, it was easy to walk on the wheel in such a way that the middle of each step, whether ascending or descending, corresponded with the centre of the axle. Thus the operator, although practically in one spot, really went up and down the steps at the same rate of speed as that at which the wheel revolved. To know the height ascended, or distance traversed, it was sufficient to multiply the circumference of the wheel by the number of revolutions; by multiplying this product by the weight of the person the work performed was given in kilogrammetres. All the other conditions for inhaling and exhaling the air, and measuring the heat, &c., were the same as in the former experiment. The persons subjected to the experiment were also the same, and indicated by the same figures as in the former table.

A curious fact, yet one which might have been foreseen, appears from these tables. Although a human being cannot be

Experiments on Five Persons made in April and May, 1857.

(In a State of Action.)

Subject of experiment	Length of experiment	Weight of the Person		Temperature		Volume of Air		Weight		Height ascended or descended per hour	Work per Hour Kilogrammetres		Heat		Thermal efficiency, or the proportion between total heat and that consumed in work
		Mean	Lost per hour	of the air exhaled	of the experimental chamber	inhaled per hour	exhaled per hour	of oxygen absorbed	of carbonic acid exhaled		Positive ascending	Negative descending	Total	per gramme of oxygen	
	mins.	kilo.	kilo.	degs. C.	degs. C.	cubic metres.	cubic metres.	kilo.	kilo.	metres.			calories.	calories.	
I.	60	61	0·4	16°	21·5	2·19	2·19	0·11	0·15	882	28·85		258	2·24	0·20
	75	61·20	0·16	8°	17·5	1·65	1·65	0·06	0·08	440		26·97	288	4·52	0·22
II.	50	72·85	0·36	17°·8	28·5	1·55	1·55	0·12	0·17	446	32·55		806	2·47	0·25
	70	73·2	0·34	17°·5	24·3	0·85	0·85	0·05	0·08	418		30·27	180	3·05	0·39
III.	41	85·10	0·30	14°	20°	1·76	1·76	0·11	0·16	391·7	38·83		333	2·86	0·23
IV.	60	50·12	0·25	18°	23·8	1·49	1·49	0·08	0·11	390·7	19·58		260·6	3·05	0·17
	60	51·60	0·20	12·5°	19·3	0·96	0·96	0·04	0·06	468·5		24·17	194	3·98	0·29
V.	60	61.50	0·20	13·6	24·2	1·59	1·59	0·10	0·14	488·5	29·72		351·16	3·24	0·19

regarded in the same light as a thermal motor, it is nevertheless evident that the direct relation existing between the amount of bodily work done, and of heat developed, shows, when expressed in figures, to what extent each individual was fit for the labour undertaken. Thus No. II. was a robust workman, and No. III. the director of a cotton mill. Both were inured to bodily exercise, and in each case the proportion was very small between the heat produced in the organism, and that represented by the work done. In other words, the excess of heat produced was a minimum, while in the two young people, who were accustomed to a sedentary life, it was much higher.

These experiments also prove a fact, taught by the experience of daily life, namely that our vital heat is increased the moment we exert ourselves, or perform work, and that at the same time, the consumption of oxygen is augmented. The kind of work undertaken also affects the relation between heat developed and work performed. It might at first sight seem as if, in the same person, this relation ought to depend upon the actual quantity of heat produced during a given time, but this is not invariably the case. Further, in a state of repose, the quantity of heat corresponding to a given weight of oxygen is always greater, than if the weight of oxygen were combined with carbon or hydrogen. In the dynamic or active condition this does not hold good. The heat equivalent to one gramme of assimilated oxygen is sometimes much less than would be produced, by the combination of the gramme with hydrogen or carbon.

From these experiments Hirn ventured to deduce, or rather, as he says, to anticipate, the following conclusions. I. That the assimilation of oxygen by the act of respiration is to a living being, at rest or in motion, the principle source of heat. II. But this assimilation causes secondary chemical reactions, which vary according to the active or passive condition of the individual, and in their turn produce or absorb heat. III. Lastly, that secondary chemical reactions may exist, absolutely independent of this assimilation of oxygen.*

* [The mean Thermal Efficiency of the five human beings doing work is by the last Table 24 %, or about the same as the best Gas Engines of to-day (1898), but of course the limits of temperature are very different. B. D.]

CHAPTER VI.

Study of Gases in their relation to the propagation of Sound.—Three Theories of Nature—Materialistic, Pantheistic, Spiritualistic—The Animating Principle—Animate and Inanimate Nature.—Force or Intermediary Principles and Matter.

The study of gases was more directly connected with the abstract scientific work that occupied Hirn's later years, and formed a corollary to his researches into the nature and functions of steam.

Gases differ from other bodies, because their tendency is always to fill whatever space is offered to them. Hence the laws relating to them are not the same as those governing liquids and solids. Hirn had already made experiments on water, hydrogen, and carbonic acid. Regnault had determined that, at constant pressure, the calorific capacity of water was 0·287, of hydrogen 3·40, of carbonic acid 0·185, but no one had thought of measuring the capacity of moist atmospheric air and gas, in their relation to the propagation of sound. If this varies, as Hirn showed that it did, the calculated will differ from the actual speed of sound. From experiments undertaken upon moist and dry air, carbonic acid gas, and hydrogen, it appeared that in proportion to the diminution in the quantity of heat lost by radiation, the calculated values of the temperatures approximated more closely to the temperatures observed with the thermometer. When all losses were eliminated, the two heat values corresponded. In all these gases the coefficient of contraction was almost the same, notwithstanding their great difference in density,

Hirn also made experiments on the effect of raising the temperature of a conical orifice, through which gases were allowed to pass. Having determined the time of falling of a gasholder filled with air, he heated the metal walls of the conical orifice through which the air escaped, to a temperature of from 140° F. to 176° F. The result was that, other conditions being equal, the bell fell much more slowly, and this notwithstanding the very short time the air was in contact with the hot metallic

orifice. Other experiments were undertaken to verify the shock of air against a resisting plane.

Three different theories have been propounded to explain the constitution of gases. The first considers them as homogeneous; the second as composed of separate indivisible material parts, held together by a repulsive and attractive force; the third denies this power, and maintains that these material indivisible parts are elastic, independent of each other, and endowed with movement, which causes the particles, while impinging against each other, to present the semblance of pressure and temperature. It is this movement of atoms having weight, which the advocates of materialism had taken as the cause of all movements of other atoms of like nature. Such was the Cinetic or materialistic theory, and to the refutation of it Hirn devoted the latter part of his life. All his experiments, both upon the shock of gases against resisting surfaces, and the flow of gases through a conical orifice of definite size, tended to prove that it is impossible to assign independent movement to gaseous particles. The rate of speed at which gases escaped through an orifice had been supposed to be limited, and upon this assumption Weisbach founded a law. For if the mass of atoms composing the gas was endowed with separate motion, and each was independent of the other, it was impossible that they could, on escaping, acquire more than their initial velocity, merely because a larger space was offered them to expand in. But if the dynamic power resided not within, but without, they could be conceived as attaining an unlimited rate of motion when issuing through an orifice, and this Hirn showed to be the case.

It was to the second of the theories cited above that he adhered. Force, he maintained, was as much a constituent part of the Universe as matter itself, nor was it possible to explain even purely physical phenomena by matter only. The constitution of gases, like that of other elements of nature, served to establish this theory, and Hirn used it as an argument to confute the advocates of materialism. As long as gases were in repose they conformed to the conditions laid down by the Cinetic theory, but once in movement, he proved that they contradicted it under many different circumstances.

Three great doctrines respecting the constitution of the Universe have always been held :—materialism, pantheism, and spiritualism. According *to the first*, the whole universe consists of nothing but matter. Man himself is matter, and his thought a movement of the atoms of his brain. All dynamic action is referred to a movement of atoms or molecules. To explain the complex phenomena of Nature, materialists have but the "Atom," and the power of movement they affirm to be inherent in it. Upon the mode of manifestation, however, they are divided, some referring all movement to the simple shock of atoms against each other; others holding that these atoms are driven against each other by a force residing in them,—thus inclining to Hirn's doctrine of a dynamic "inter-atomic" Force. *The second*, the pantheistic theory, affirms that man is composed of matter, force, and spirit, the three forming together one transmutable essence. *The third* resolves the universe into two absolutely distinct elements, Matter and Force, to which in organic nature is added a third wholly separate element, the animating principle or Soul.

The last view embodied Hirn's philosophy, and he protested all his life against materialism and pantheism, maintaining that the researches of science, and especially the laws of thermodynamics, effectually refuted them. To establish the doctrine of spiritualism, and to disprove materialism was the keynote of his labors; it may be called the ideal or spiritual side of his scientific work.

His main object was to extend the application of the great doctrine of the mechanical theory of heat, and to show that it entered into many kindred sciences. The consequences of the law were far reaching, and connected with physiology, psychology, and pathology, as well as the mechanical sciences. It is also allied to molecular science, or the study of atoms, because the way in which they are affected by what was formerly erroneously termed "latent heat," and now more correctly internal work, shows that the same law governs molecular and chemical action. The existence of indivisible atoms, unalterable in shape or quality, and which therefore can never be fused into the great All, refuted the doctrine of pantheism. Sound and heat, as shown by Hirn's researches into the constitution of gases, are closely related. We have seen with what precision it was possible to

apply the law of the mechanical theory of heat to human beings. But perhaps the most important use Hirn made of it was to explain the principles of psychology. Dynamic materialism rested on a universal movement of atoms. Movement, it was maintained, could only come from movement, in other words, to set any body in motion, it must be acted upon by other bodies already in motion. This doctrine, which would reduce the universe to an aggregate of atoms, Hirn strongly denied. If everything were thus brought down to a material level, and thought, for instance, which communicates movement to the nerves, were itself a part of material nature, the soul would be "only a vain sound, which would one day be extinguished."

Force, therefore, Hirn introduced as a second element into his theory of the universe. In contradistinction to matter, it might be considered a manifestation of thought, having a real but not a tangible existence. By an exhaustive process of argument, ascending from the infinitely small—the atom,—to the infinitely great—the realms of space,—he endeavoured to prove that Force was a constituent part of the universe, in the same way as, but wholly distinct from matter. To explain all phenomena by matter alone, he had shown to be impossible. Nor is Force a quality of matter; it is an altogether different principle. Bodies consist in the first place of an aggregate of atoms, and these are held in position by Force. The atoms themselves are definite in form and indivisible; that which varies is the space between them, depending upon the action of the circumambient Force, whether it integrates or disintegrates them. Therefore the apparent volume of all bodies consists—I. Of the volume of their atoms, and II. of the volume of their interstices. In water, for example, at maximum density, the volume of atoms is only nine-tenths of the total volume.

To say that creation is limited in space, and that the physical world is finite, is to limit the Creator in power and will. Matter is limited and finite, but Force is unlimited, and extends beyond space. Force is not a single or simple element, but may be resolved under four heads—gravity, heat, light, and electricity. As far as we know, the first is invariable, the three latter vary in the intensity of their manifestations. Considered more closely, their mode of action is too general to be strictly defined as force,

the term "intermediary principle," describes more accurately these elements of the dynamic power. They serve to reveal one body to another, and make each act upon the other, although millions of miles apart. Thus light, though it forms no constituent part of a star, reveals to us the presence of that star.

In organic beings we are confronted by a third principle, distinct from Force and Matter, existing from its birth in everything having life. It cannot be matter, since it is devoid of substance, nor is it force, because it has its seat in the individual alone, and not in the surrounding medium. Such an inner principle must govern chemical affinity, and the intermediary forces in human beings, and it cannot be referred to electricity, which we have seen to be a constituent of the surrounding element. The faculty of thought in human beings works in somewhat the same way as an electric battery, an animating principle, therefore, must be assumed, to set it in motion. But this animating principle comes nowhere into direct contact with matter; the two are put in relation with each other by the intermediary force. The animating principle cannot be considered as universally diffused, since it is one and indivisible in every living creature, but it may aptly be called the "organizing power" of the unit it inhabits.

This principle, defined by Hirn as the Soul, is the power that both organizes and thinks. Life is its manifestation. But the Soul by itself is only an abstract entity, and matter and force, or that is principles having physical properties, are needed to bring it into contact with living beings. Thus Force and the animating principle are so intimately connected, that to establish the manifestations of the one, in ourselves, is sufficient to determine the reality of the other.

Viewing the human body in a strictly scientific light, Hirn held that it might be considered either as an instrument to put the soul in communication with the outer world, or as a motor governed by the soul, as a steam engine is governed by dynamic force. The soul, however, has no direct hold upon matter, it can only communicate with it by means of one of the intermediary principles. These, therefore, have a double function, a dynamic, having regard to the movement of matter, and a power of revelation, inasmuch as they place atoms in connection with each other, and make each cognizant of the other's properties, as

when a hot and a cold body are brought in contact. The mechanical theory of heat unites these two functions, because it proves that the potential work represented by all the forces of the universe is a constant.

Such were the main principles of Hirn's philosophy, which he proceeded to work out in detail. The whole universe and its constituent parts were divided by him into two classes, animate and inanimate nature. Between the two, and the physical and and spiritual phenomena they manifest, there is a marked difference; the soul acts, the intermediary principles work. Another broad distinction is, that animate nature is in its essence transitory, that is, it has its beginning, its growth and development from a germ, and its end in death. Although, in a limited sense, this may, in astronomy, be a characteristic of so-called inanimate nature, in the latter, the elements are always the same, while in animate nature they are ceaselessly changing, transformed, and renewed. The elements of inanimate nature may alter and combine under new forms, but with animate nature, death means the total separation of the animating principle from the other elements.

All nature, whether organic or inorganic, is governed by two main laws, each of which is a complement of the other. The first forbids us to confound the members of the same species, and shows that each has its own individuality; the second reveals the infinite variety of manifestations, proceeding from one and the same cause.

In the study of inanimate nature we find that all bodies, even those that appear simplest and self-contained, have three properties placing them in relation with the outer world. I. Colour and form, establishing a link between the body and our visual faculties. II. Weight, connecting it with the specific gravity of the earth, and of other bodies in space. III. Heat, depending on, and acquired from the surrounding temperature. Further, every body consists of two elements, one, the separate molecules composing the body, the other, the relation existing between them, or what we have called the volume of the atoms, and that of their interstices. The weight of a body is proportioned to its mass, and the specific weight and mass of a body is unalterable. This is proved by the mechanical theory of heat,

when applied to the absolute zero. If it were possible to reduce a body below the size corresponding to absolute zero, it would also be possible to expand it to the same size without any equivalent manifestation of heat. This would violate a fundamental principle of Thermodynamics. Let us suppose a solid body compressed to its smallest bulk, and reduced to the absolute zero of temperature. If the pressure be now gradually diminished, the volume of the body will begin to increase, and will return by degrees to its original size. To surmount the pressure of the atmosphere will require a certain amount of external work. But this external work cannot entail the corresponding diminution of temperature, since the body is already at absolute zero. Hence it would be possible to obtain work without change of temperature. But if the tendency of a compressed body to return to its original volume is due to anything else but the heat it contains, that is if at absolute zero, it can perform work, external or internal, without a change of temperature, it may in the same way be compressed at any temperature without heating, and the exact proportion existing between heat and work is destroyed. This example illustrates one of the great laws Hirn laid down, that heat is lost by the act of expansion. It further shows that matter is composed of an infinite number of atoms, irreducible and indivisible, which can never be resolved into one, according to the pantheistic doctrine, or annihilated, as asserted by the materialistic philosophy.

The intermediary principle, according to Hirn, acts first dynamically as motive power, and secondly as an agent to establish relations between material atoms. It is not, as some have supposed, a substance like matter, but devoid of weight and indestructible, since the mechanical equivalent of heat proves that it cannot cease to be. Nor is it an undulating ether or gas, of which heat, light, electricity, are manifestations, nor a movement of matter, produced by a previous movement of the same material particles. After half a century of laborious research, Hirn was obliged to confess that the cause of movement remained a mystery. Nothing in his investigations enabled him to explain its origin; all he could say authoritatively was, that movement can never be a cause of movement. When atoms or gases impinge against each other, they are arrested for a fraction

of time, then shoot off in the opposite direction. During this measurable instant of repose, there is no matter near them in motion, which might communicate to them their second phase of movement. It must proceed from a principle independent of matter, *i.e.*, the force of attraction and repulsion, or gravitation, which is dispersed through the universe, pervades it without regard to matter, and causes the reciprocal movement of bodies. Wherever two molecules oscillate against each other, something must be present, totally distinct from them, capable of destroying and re-establishing their movement.

But Hirn had a third argument against this theory of movement proceeding from motion, which was really only materialism under another form. If movement is caused by matter, attraction itself, the influence the sun exercises on the planets, and on the solar system, is matter, and all space is filled with infinite particles of matter. To demonstrate the error of this argument, let us suppose a body moving in a circle round a larger body. As the smaller body revolves, it is struck by the atoms or particles of matter on both sides of it. To those in the direction in which it is moving, it will communicate greater speed; those on the opposite side will lag behind and retard its progress, and by degrees, as it drives the atoms before it, seeking to communicate its own impulse, it will be brought to a stand. Attraction, therefore, cannot be the result of the movement of even invisible matter. Nor can absolute void, even if it be proved to exist, establish the relation between two bodies, which is necessary to explain the phenomena of daily life. Newton, declared that no bodies could act on each other across an absolute void. Hirn, therefore, was driven to the conclusion that gravity, and its kindred forces of heat, light, and electricity, must be parts of a dynamic element.

Passing on to consider the phenomena of Heat, Hirn rejected the theory of oscillations or undulations of atoms, showing that this would explain internal, but not external heat. Both implied the previous presence of matter in motion; but no matter can be imagined as existing in space, and yet the phenomena of heat and light are manifested in the solar and stellar systems. Nor was the theory of emission or radiation more applicable. It supposes light and heat to be particles of matter emanating from

the celestial bodies, but a little reflection will show that this is impossible. Were the theory true, the sun, planets, and all hot bodies would not only lose in weight, but by the laws of gravity the projected or radiated matter would soon lose its speed, and fall at random in space. Nor is the phenomenon of internal heat explained by these means. Some power must exist outside the atom (proved to be invariable in volume), which is able, during the instant of repose intervening in the oscillation of atoms one against the other, to overcome their inertia, and set them again in motion. Hirn supposes the case of an elastic ball, rebounding from an immoveable mass. When the shock of the ball meets the mass of inert matter, the ball recoils. But there is a fraction of a moment before this contrary action is set up, during which the ball is in a state of perfect repose. What is the force that sets the ball again in motion? Clearly not matter, since matter is for the moment inert.

Further, we see that gravity, electricity, and probably also caloric, act by repulsion and attraction across immense distances. Neither the undulatory theory of matter in repose, nor the oscillatory theory of matter in movement, can give an account of these phenomena. They can only be explained by the proposition from which Hirn started, that to communicate the motion of matter to other matter, the intervention of some intermediary element or principle is needed, having, like gravitation, the power of drawing the molecules from a state of rest, and restoring them to the same condition.

The broad distinction between these intermediary principles or forces, and matter is, that they are present everywhere in space at once, and are not in themselves subject to the finite conditions of Time and Space, although both are required in their manifestation. This condition implies a certain movement which Hirn calls "dynamic activity," and of which light, heat, and electricity, are different manifestations. By its very nature Force itself escapes our perception, and we only recognize it when it reveals itself as motion. The translation of force into movement, and movement into force, brings us back to the original theory of the mechanical equivalent of heat. For, since the atoms composing any body can only move when acted upon by force, they cannot move without producing a mechanical

equivalent to that force, in the shape of internal or external work developing heat. Upon this theory the construction of thermal motors is based.

The next question considered by Hirn was, whether there existed different species of atoms, or whether all matter was uniform. Hirn found, on weighing a litre of water, that the specific weight of the oxygen and hydrogen contained in it was only 95 per cent. Now, if all atoms were the same in kind, this weight of oxygen and hydrogen in water would give the maximum weight of a litre, whatever the composition of the body weighed. It was on the contrary, the smallest weight among solids and liquids. There is no such thing, therefore, as a specific unity of matter. A certain specific weight, called by chemists "atomic weight," belongs to all chemical elements, as oxygen, sulphur, carbon, &c. For instance, the atomic weight of platinum is 190 times greater than hydrogen, the respective weights being as 1233⅓ to 6½. Now, the calorific capacity (specific heat) of a body is the proportion between the quantity of heat necessary to raise to a given temperature an equal weight of this body and of water. If the atomic weight of any elementary body be multiplied by its calorific capacity, the result will be a constant, because the atomic weight of a simple body is always the same. But the numbers obtained will only be constant in a given order of chemical combinations. For if all bodies required the same amount of heat to raise them to a given temperature, all would evidently be alike in weight, and composed of the same number of atoms, proving the specific unity of matter. The calorific capacity of bodies shows that this is not the case.

Hirn's study of the science of atoms confirmed his division of the intermediary Forces into Gravity, Electricity, and Caloric (in which light is included). The distinguishing feature of the force of gravity is that its constancy is, as far as we know, unlimited, and it acts on all bodies alike, so long as their weight is the same. The caloric force manifests itself differently. To determine the calorific capacity of any body, its chemical equivalent, that is the number of atoms it contains, must be known, not its weight, because the calorific force acts upon the periphery of the atoms, and not upon their mass. The same law holds good of electric force, which also acts upon the

number, and not upon the mass of atoms. Nevertheless there is a radical difference between the two. The caloric force is always manifested as a repellant agent, driving the molecules of matter apart; electricity reveals itself, not only as a repelling, but as an attracting power. Heat addresses itself only to the atom, electricity acts not upon the atom only, but upon the molecule or aggregation of atoms.

CHAPTER VII.

Contrast between the Dynamic and the Animating Principles.—The Soul the Animating Principle in Animals and Plants.—"Constitution de l'Espace Céleste."—Dynamic Element in space.—Interstellar Medium.—The Solar System.—Hirn's Death, Jan. 1890.

But there is a third order of phenomena to be studied, the animating principle, or Life. Here Hirn had first two main errors to refute; one that Life is itself a Force, able to create chemical, physical, and mechanical phenomena; the other that it is a climax or perfection, to which the forces of inanimate nature may slowly attain. Life, said Hirn, does not create the forces of light, heat, and electricity, it utilizes and substitutes them one for the other. Dynamic forces are everywhere diffused, and pervade all nature; life is strictly localized in each animate unity. Not only is it not a development of force in general, but it never manifests itself directly as a force. Inanimate nature is distinguished by its homogeneity; animate nature by its harmonious heterogeneity. Unless the principle of Life is present, no force is of any avail in animate nature, and just as the intermediary or dynamic Force reveals itself in light, heat, and electricity, so this principle of Life manifests itself outwardly through the emotions, and especially through the affections. No dynamic Force passes suddenly from a given value to nothing, but at Death the cessation of the animating principle is instantaneous.

The existence of this animating principle conceded, the next question is, how does it act upon matter? In what way does it affect the muscles, and make them perform the actions willed by the brain? Formerly this operation was attributed to a nervous fluid, but Hirn pointed out that in that case, there would be loss of this fluid without any corresponding gain, which is impossible,

since *nothing* is ever lost in nature. Others held that the nervous influx is due to a vibratory movement of the material tissues of the nerves. Hirn, however, maintained that the nervous action was caused by the dynamic principle, manifested in human beings as electricity, and acting as agent between the animating principle, and the material medium. The soul, he said, has no direct hold upon matter, nor can it be a perfected force, since it does not possess the essential attributes of force. Its functions too are wholly different. It has first to construct or build up, and maintain the organism; secondly to enable the living creature to make use of this organism.

An illusory distinction had formerly been made between the life and the soul. It is true that the functions of the soul, as thinking, loving, &c., are performed consciously, and the functions of the body, as growth, nutrition, digestion, are performed unconsciously and involuntarily, but the two are linked together by a whole series of partly or wholly voluntary, yet necessary actions, half-consciously performed. The most remarkable characteristic of the vital principle as a constituent element of the universe is its plastic power. Only through the medium of the body, the corporeal element, can the animating principle, not only be brought in contact with the external world, but act upon itself. Yet it possesses physical properties, and has a real existence, apart from the brain, with which some philosophers have endeavoured to identify it. This is proved by the phenomena of health and disease, the absorption and rejection of poisons, and other manifestations of life. But "without the help of the dynamic element" says Hirn, decisively, "the soul cannot know the outer world."

Although the animating principle is separately revealed in each unity, yet it is transcendant, and not bounded by space. It can be no more localized in any part of the body, than can the dynamic elements be localized within corporeal matter. The very existence of the animating principle, which is able to conceive, although not to understand the Infinite, is opposed to any limitations of its nature. Memory, imagination, judgment and other operations of the mind, are not separate organs, but co-ordinate functions, governed by one supreme, controlling, and organizing faculty. That the animating principle can act beyond time and space is shown by our dreams. The phenomena of dreams prove that the

soul can act without its mental and organic instruments, for it is not these instruments that think, but that it can do nothing correctly without them.

Hirn ventured on very delicate ground when he suggested that this principle might, and indeed must exist in other beings beside man. For if we admit that there is in man a principle superior to the ordinary forces of nature, we can hardly deny it to animals. Does this animating principle, he asked, vary so widely in man and in the higher animals, as to be not only different in degree, but in nature? Animals do not act by instinct alone. Instinct guides them, but in certain animals, such as the beaver, the bee, the ant, these instinctive acts are unquestionably accompanied, directed, and modified by thought. Nor can the modifications be attributed to imitation only. The instinct of imitation is combined with a certain original power of reflection and choice, shown in the fact that animals will not continue to perform the same acts, unless the acts are rendered necessary by the same circumstances. Of certain animals, all we can affirm is that they are inferior intelligences, but we are not authorized to infer a difference of nature between them and man. In animals, as in man, the distinctive characteristic of the higher grades of intelligence is the power of affection. They also undoubtedly possess the capacity to express themselves by signs, though man alone is gifted with the faculty of articulate speech. In short there is a considerable, but not an infinite distance between man and animals, a specific difference, but an analogy of nature; for without analogy, there could be neither superiority nor inferiority.

The properties of the animating element are spontaneity, liberty, consciousness of our acts, affection, and specially that attribute of unity which endows every living creature with a separate animating element. This attribute cannot be denied to the lowest beings in the scale of creation, nor would Hirn refuse it wholly to plants. Undoubtedly, plants are endowed with harmonious unity of structure and growth, and develop under the influence of a directing power, like man and the animals. The form of the organs is totally different, but the functions they perform are not only analogous, but in their results actually identical with those of the higher organisms.

No evidence of a nervous system has hitherto been discovered in plants, yet some equivalent for it must exist, since certain poisons which have a deadly effect upon the human frame act upon them also. Nor are they destitute of the first attribute of the animating element. "Like man," says Hirn, "the vegetable developes organically, under the control of a directing power, which acts in conformity with a preconceived plan, and is superior to, but utilizes the elements of the inanimate world." In a limited degree, plants possess the power of spontaneous movement, as evidenced by the sunflower. With some it may even be affirmed that they act consciously. The sensitive plant, for instance, if subjected to the jolting of a carriage, closes its leaves, and gradually opens them again. If the jolting ceases, and suddenly begins afresh, it instantly shuts up, to unfold again in the same gradual manner. Thus plants perform certain higher functions, which must be called sentient and psychical, in contradistinction to physical. In considering sex in plants, Hirn even went so far as to attribute to them the characteristic of affection.

He next exposed the fallacious doctrine of the spontaneous generation of living creatures in time and space, although he allowed that the animating principle cannot act without certain chemical combinations, as oxygen, hydrogen, &c., and certain dynamic elements, light, heat, &c. According to the presence, to a greater or less extent, of these elements, life degenerates or is more completely developed, and the type improves. Whether man is at all affected by climatic considerations, and the absence or presence of these chemical or dynamic elements, is a question still undetermined. As to the original unity of the human race, Darwin himself does not maintain that all animals are derived from one type, but only that the number of original types is very limited. To say that a living being can come into existence where life was not before, or that different species of organisms are produced one from the other, is to maintain, in other words, that man is a product of matter. If life can suddenly appear where no previous germ existed, there is no animating principle, since life can be evolved from matter. Every soul is the seat of a separate and indivisible animating element; therefore, to say that man is derived from an ape, can only mean that an organic germ of an ape has become worthy to receive a human soul.

Whatever may be thought of the system of philosophy here expounded by Hirn, science clearly shews that man is not, as he has so long been considered, the centre of the universe. Not man alone, but plants and animals, and all living entities contain in themselves the animating principle, and have "not only a destination, but a destiny."

We now arrive at the last phase in the development of Hirn's scientific and philosophical theory of nature and the universe. Beginning with Friction, he had expanded the great law of the Mechanical Equivalent to meet the requirements of each successive branch of natural science. But its noblest application was found in the realms of Space, as set forth in his great work on the "Constitution de l'Espace Céleste" (1888). This book was the logical outcome of all his former theories. In the present cursory review of his work, it is impossible to do more than glance at the propositions and theories laid down in it. They had been often insisted on before, in different works, but it remained for Hirn to crown the labours to which he had devoted his life, by combining them all in this lofty refutation of the doctrines of materialism, and exposition of the law of the Mechanical Equivalent of Heat.

He had already shewn that it was impossible to imagine matter as filling all space. Matter, however rarified, cannot exist in the infinite intervals separating the stars and solar systems, nor can the existence of an interstellar gas be verified. Newton maintained that it is impossible for the stars, suns, and planets to act on each other by attraction and repulsion across a vacuum; there must be something to establish these relations, not inherent in, but outside matter. Since no action can be supposed to take place across a void, the interstellar space must be filled with some element, not material, in other words, with a dynamic element. This fact which Newton had proved with regard to gravity, Hirn and others verified in light, heat and electricity. "Dynamic action," he maintained, "whether exerted on two atoms or two celestial spheres, can only be considered as the result of a specific relation established between the disjointed parts of matter, by an intermediary distinct from it,"—in other words, by a Force. Force alone is the element capable of setting matter in motion, without the existence of previous movement. The dynamic principle reveals in the same way the atoms in a gas, and the heavenly

bodies to each other. How it acts upon the material element we do not know at present, except that matter appears to be generally but not invariably necessary to its manifestation.

In space devoid of matter there can be no such thing as temperature, since temperature is the intensity of the calorific force residing in a material body. The moon, therefore, being devoid both of atmosphere and of temperature, cannot be inhabited, but Hirn found it impossible to determine whether the other worlds around us in space have inhabitants.

If we suppose the intermediary interstellar element to be material, it would oppose the passage of bodies through it, and modify all the celestial phenomena. A gaseous medium could not fail to act, however feebly, upon the motion of the planets and satellites, and by resistance affect the movement of the moon round the earth. If the emanation of heat from the sun were caused by the radiation of matter, or of a material fluid in a state of vibration, it would influence and deflect the movement of all the heavenly bodies. Most especially would this be the case with the comets, which, on account of the eccentricity of their orbits, are already subject to much perturbation, from the massive bulk of the planets. If these bodies in their prodigiously rapid course encountered the resistance of a material medium, they would be ground to atoms. Some astronomers have supposed that their eccentric movements were themselves due to a material and resisting medium, but the attraction and repulsion of the planets, all of which are far larger and more weighty than any of the comets, are amply sufficient to account for the irregularities observed. Hirn confidently affirmed that if the interstellar medium possessed a specific volume of its own, "no comet would be able to perform a single revolution round the sun, without having the gas of which it is composed completely dispersed throughout its orbit, and being finally arrested in its motion." If such a resisting medium existed, the comets would be separated from their brilliant and finely shaped tails, and the latter would be instantly dispersed through space. Again, a material gaseous medium would be greatly influenced by the planets and satellites. With bodies devoid of atmosphere, like the moon, the shock of their mass impinging upon the material interstellar medium would be incalculable. Nor is it possible to imagine an atmosphere capable

of resisting it; the planetary atmospheres would be gradually dissipated into space. The mere friction of the particles of such an atomic atmosphere would in time destroy its speed and motion. No trace, in short, can be found in Space of the existence of matter, aggregate or disintegrate, in repose or in motion, in a diffused or a compact form.

It is in other ways that we must seek to explain the nature of the medium which fills the celestial firmament. Since temperature does not exist in space, the medium can only be affected by the radiations of light and heat from the sun and stars. From the stars these are inconceivably small. The radiation from the sun is supposed by many astronomers to be gradually diminishing, but such cannot be the case to any appreciable extent. Loss of heat would imply loss of bulk, and such decrease has not been verified since our astronomical observations began. If in truth the heat of the sun is gradually being dispersed by radiation through space, and its mass growing cooler, there must be some unknown and compensating force, or source of heat, at work, the nature of which we can only surmise.

Whether as a result or a cause, Hirn had at least shown the existence of some non-material dynamic element to be probable. That the solar system is not destined to ultimate extinction he considered a legitimate deduction from the facts established by science, holding it in the highest degree improbable that Nature, in this one instance alone, should tend to annihilation. Here at last, where the firm ground of fact failed him, and he was compelled to resort to hypothesis, he brought his manifold labours to a close. He died at Colmar, in January 1890, less than two years after the publication of this, his last and greatest work. For some years previous to his death, the writer was honoured with his friendship.

Hirn's scientific work presented a remarkable unity of thought, through many different developments. Starting from his great discovery of the Mechanical Equivalent of Heat, the value of which no one can deny, though it had been anticipated by others, he traced the principle therein contained through the various manifestations we have endeavoured to describe. His fame rests upon his experimental method, elucidation of the theory of the steam engine, and discovery of the laws that govern the phenomena of

heat motors. But these researches were only a part, though practically, perhaps, the most important part of his work. They may and doubtless will be set aside by other workers in the same field, for whom he has prepared the way. To him his studies appeared as stepping stones to the complete refutation of the materialistic and pantheistic theories of the universe. This was the final result of his work; and he desired no higher claim to consideration than that he had vindicated the doctrine, that Nature, like Man, has a soul, and the constitution of the Universe is not material, but spiritual.

VENTILATION, HEATING and HUMIDITY.

READ SATURDAY, NOVEMBER 11th, 1893,

BY

Mr. Jos. Nasmith,

MANCHESTER.

The subjects which have been coupled in the title of this communication are perhaps as little understood as any two subjects of equal importance. The effective ventilation of large public buildings, and of even smaller rooms such as the one we are in, is at present, in the vast majority of instances, yet in the future. The Legislature becoming, under pressure from without, careful of the lives of its citizens, occasionally lapses into moments of active law-making, and passes a Cotton Cloth Factory Act designed to provide the minimum amount of ventilation which is permissible. But these are only like spots on the sun—they show the seething activity beneath, but do not exhibit themselves in a steady and consistent manner. It is with the intention of making an attempt to state the problem with as much clearness as possible, and of indicating the remedies which lie at hand, that this paper is written. The author's attention has been somewhat pointedly called to the matter in connection with School Board work, the erection of a school having led to the necessity for making a special enquiry into the whole question. It may perhaps be premised that the subject of heating will also require some treatment, because it will be found that in most cases all of these questions are inseparable.

The first question to be answered is, What is ventilation? This may be defined as the replacement of the air in any building as it becomes foul with fresh and—as far as practicable—unpolluted air. This definition leads to another conclusion, namely, that the air must be supplied in such a manner that the replacement is positive, and not merely negative. The point

thus stated, the question to be solved is how this positive movement of the air is to be effected. In attempting to find a practicable way, we are immediately met with the diversity of conditions which render uniform treatment well nigh impracticable. This difficulty is enormously increased by the fact that in all cases ventilation must be accompanied by heating, and in some by the production of an artificial humidity. It will therefore be a convenient division of the subject if for a time these subsidiary requirements are put out of sight and the question of ventilation pure and simple is first considered. In doing so it is not proposed to attempt to suggest any effective method of ventilating private houses—although that is easy enough—but to deal with those larger buildings, both public and manufacturing, which are at present so wofully neglected.

Broadly speaking, the ventilation of one room is a type of the ventilation of a number, and if the proper mode of effecting the work in one case is adopted, its multiplication, although requiring consideration, is not impossible. Let us suppose a room say 100 feet long, 60 feet wide, and 35 feet high, with a capacity of 210,000 cubic feet, and a floor area of 6,000 square feet. Assuming that the allowance of the Education Department of 10 square feet per head be adopted, such a room would seat 600 people, but under ordinary conditions it may be taken as having a capacity of at least 900. Now, under the conditions such as prevail in this room at present—a quiet audience—these 900 people would exhale 250 cubic feet of air per minute, of which 4 per cent. is carbonic acid. In an hour the quantity would be 15,000 feet, or 30,000 in two hours, while in the same time the carbonic acid would reach 1,200 cubic feet. That is, that in the two hours there would be in every 175 parts of air one part of carbonic acid, or 57 per 10,000 parts of air. In addition to this there is a certain volume of vapour given off in breathing and from the skin, and it is estimated that a person who is in an ordinary state of cleanliness, so that his skin acts, gives off a certain volume, equal to about one-fifth of that just stated, of carbonic acid from his skin. Thus it may be taken that if these people continued to breathe the same atmosphere, it would in two hours be charged with about 70 parts of carbonic acid per 10,000 parts of air. Now the normal amount of this

gas in the air in Manchester, even during a fog, does not exceed 9 per 10,000, and in ordinary times is about 4 per 10,000. It is, therefore, clear that in this respect the conditions named are very bad, and that a very short time is required to render a change of air necessary. Leading authorities tell us that the feeling of lassitude and weariness which is one of the signs of poisoning by the inhalation of carbonic acid begin to manifest themselves when 10 parts per 10,000 of air are present. It is obvious, therefore, that very early in the occupation of a room or building the necessity for a renewal of the air is manifest. Of course the case supposed is one in which a large number of persons are present, but in degree the same thing applies to each individual. The need of a change of air is therefore apparent. The next step is, how to effect it?

The point which chiefly affects this problem is that the fouling of the air is continuous. If it were possible to completely exhaust a room every ten minutes and recharge it with fresh air, this would represent the needs of the case presumed, but it would be neither practicable nor wise. As the pollution is continuous, so must the provision of the diluting medium be continuous. For it is all that can be looked for in a case of this kind, that the air shall be so diluted that the quantity of carbonic acid will be reduced to a safe limit. Without going into the figures of the subject minutely, it may be said that 7 parts of carbonic acid per 10,000 of air is looked upon as the limit, which, on sanitary grounds, is permissible. Now in the case supposed, the limit would be reached in 12 minutes, supposing the air to be absolutely pure, so that unless dilution began with the occupation of the room, there would be little chance of the proper standard of purity being maintained. There is, moreover, in addition to this factor, the question of the gas burning in the room, to consider. Every burner which consumes 4½ feet of gas per minute, eats up 45 cubic feet of air, and the carbonic acid it produces, must be at once diluted or removed. Now to do this, and at the same time provide for the sufficient dilution of the acid emitted from the person, requires from 30 to 45 cubic feet for each person per minute, which on the supposition of the presence of 900 persons, means a supply in the room in question of 27,000 to 40,500 cubic feet per minute. Taking the smaller figure, it would mean that

in eight minutes the total cubic contents of the room require changing, in order to provide the necessary dilution. As a matter of fact, in the best examples of modern ventilation which can be found, the capacity of changing the air from 4 to 7 times per hour is provided. The Cotton Cloth Factories Act prescribes a minimum volume of air of 600 cubic feet per person per hour, and this has been found to be sufficient. At the same time, the number of cubic feet of air per head in a weaving shed is much larger than in a theatre or crowded public hall, so that the fouling of the air does not take place with so much rapidity. This part of the subject is purposely slightly treated because the facts are beyond dispute, and are only intended to prepare for the treatment of the practical side of the question.

This is, how is so large a volume of air to be moved without creating a draught in the apartment? For it must be remembered that any such result would be fatal to the adoption of any system. The most usual method of renewing or attempting to renew the air of a room is that of trusting to the natural tendency of heated air to escape by means of any openings which may exist, leaving the fresh air to find its way in as best it may. It need hardly be demonstrated that this system is a failure, even if it be accompanied, as it sometimes is, by the draught induced by a fire. There are days on which the barometrical conditions are such that the air will not move under the gentle compulsion of air heated within a room, as every steam user knows who has had a difficulty with his boiler draught on such occasions. Again, there are times when the temperature without is actually higher than that within, in which case it is impossible to hope for any movement of the air. Yet it is upon a system as antiquated as this that a body so distinguished as the Manchester School Board relies, for it ventilates its schools "by cross currents" between an open window and an open fireplace. A better method is that of extraction, but even here there is need for caution. The so-called automatic extractors, although largely advertised, are in effect neither automatic nor extractive. The existence of an external current of air is an absolute necessity to their even partially successful working, and it is needless to say that this is not always present. Cases are not rare in which appliances of this nature have utterly failed

to remove the air from a room even partially. In the report for 1892, of Mr. Osborn, H.M. Chief Inspector under the Act named, the following remarks are made:—"At this place, when built, some £600 had been expended on 'self-acting" ventilation, which had proved 'non-acting' in summer, and in winter simply produced down draughts, and so had to be stopped entirely." Reference is not now made to that type of ventilator which, when rotated, like the Howorth ventilator, does induce a partial current of air, although it may be doubted whether it is of sufficient strength to be of real service in all cases. The partial success of this type of ventilator is an additional proof, if it were needed, that some absolute application of force is required to give even such results. Extraction, to be successful, requires careful application, and care must be taken to see that the force provided is sufficient. It will therefore be profitable to set aside at once these cheap but ineffective appliances, and see in what way extraction can be accomplished with a reasonable hope of success.

The methods of extraction usually adopted consist of the employment of an induced current of air within a shaft, or extraction by means of fans. The former is the more common method of the two, and has often been applied with considerable success. As the velocity of a current of air in an extractor shaft is practically the same as the draught of a chimney, it is calculable by the same rules as are used for that purpose, and depends upon the difference of temperatures at the bottom and top. The formula for this is where H = height of chimney in feet, T = temperature of air entering chimney, t = temperature of air at top of chimney, and V = velocity in feet per second. $V = 36{\cdot}5 \sqrt{H(T - t)}$. Where the arrangements permit of the creation of a current of sufficient velocity the extraction of foul air can be effectively performed, but it is in all these cases desirable to see that the connecting flues are not too long, as otherwise the loss of suction by friction will be great. Thus, in a smooth pipe 24 inches in diameter, and 100 feet long, the loss of pressure by friction is, at a velocity of 1000 feet per minute, ·046 ozs. per square inch. With a rough surface, such as a brick flue presents, the loss is greater. Given a sufficient

velocity and proper connections without bends, a large volume of air can be moved. It only requires pointing out that the effective employment of ventilating extractor shafts can only take place when means are taken to ensure, under all circumstances of atmospheric pressure, an effective current. It is often the case that an extractor shaft is deprived of its usefulness in the summer time because no means are forthcoming to create a current, which, owing to the balance in the atmosphere within and without the building, cannot be naturally created. The provision of some form of furnace or heater is therefore imperative if the full effect is to be obtained from an appliance of this nature. The same factor materially affects many of the so-called automatic ventilators, which are of no value in still air and equal temperatures. At the same time there is no doubt that the removal of air from a building by the mere power of an extraction shaft can be effectually performed, but it is very rarely that, when means of this character are used, the connections are carefully and thoroughly thought out. It is necessary to ensure a connection with each room in such a way that it feels the full power of the extractive mechanism, and it is often the case that this portion of the work is very ineffectively carried out. The course and direction of the flues, the existence of sharp corners where bends should be found, the finish of the flue, and the number and position of the outlets alike have their influence upon the subject. The most perfect examples of ventilation are those in which the area and position of the openings into the extractive flues are alike ample and well placed, as in this way draughts are avoided while enabling a perfect extraction to take place. This is a point which will be reverted to at a later stage.

With regard to mechanical extraction, there is, of course, no difficulty on this score. Those members who went over to the Peel Mill, at Bury, may have noticed in the cardroom tubes fixed in the windows, each having a small Blackman fan fixed in it, by means of which the fly and dust always existing more or less in cardrooms, is taken out. No doubt this method of application has some merits, but it is not perfect, either in conception or the means of carrying it out. It would be much better in every case to remove the dust and fly by a duct below the level of machine

instead of above it, that is at the floor level, so as to prevent the fly getting into the room. The extractive current must be slow and gentle, so as to cause no draught. There is little doubt that this plan would prove the best, but it requires, of course, some special preparation in the floor of the building. No doubt many of the members have seen, or have some knowledge of the process of preparing pottery for the market. Before the glaze has been applied, it is the practice to fix the article upon a wheel or disc, which is driven at a considerable speed. The operative holds to the piece of pottery a handful of coarse flax or hemp tow, and thus brushes off any superfluous dust from its surface, rendering it smooth for the succeeding process. This process of "towing flat" as it is called, naturally gives rise to a lot of dust, and formerly this was evolved in clouds into the room and respired by the operatives. Naturally this was injurious to them, and "potters' asthma" is a well known disease. By a simple method of extractive ventilation, this process has been rendered as healthy as any other. Over the wheel is placed a glazed hood, which does not obstruct the light or interfere with the free working of the attendant, whose hands pass easily into the hood to remove, replace, or brush the "biscuit." At the back of the hood, in the bench or table, and behind the wheel, is an aperture connected with a duct coupling a group or series of wheels together, and having at its termination a Blackman fan working extractively. By this simple and inexpensive appliance the whole difficulty of the emission of dust has been overcome and many lives saved. This particular instance is only given to show how readily the principle of extraction from beneath can be applied. In this, as in many other things, absolute uniformity is neither possible nor desirable, and the circumstances of each case must be separately considered. There is no doubt that by a system of mechanical extraction, the condition of the air of a building can be kept comparatively pure. The only thing to insist on is that the volume of air removed shall be ample to procure the necessary dilution of that within the building which has been fouled. It is not necessary to give any out and dried rules for ventilation, because all that at this point is desirable is to lay down principles to meet the case. A few practical examples will be given before the paper closes.

All that has been said hitherto has dealt mainly with the removal of air from a building. It follows, as a matter of course, that the place of this outgoing air must be filled by an equal volume entering. As a rule, little more pains are taken to provide for this than are taken to ensure extraction. The Manchester School Board relies on open windows, but it need hardly be pointed out to an assembly containing a few bald heads that this is not quite common sense. Generally, however, the matter is left in a haphazard condition, but in some cases is compromised by the employment of Tobin's tubes. The chief fault of these will be pointed out at a later stage, and it will suffice at present to point out what the conditions are under which air can be effectively introduced into and removed from a room. In the first place it is necessary to fix upon the quantity which it is desired to provide. After that comes the important point of its distribution. This must be so arranged in conjunction with the exit orifices, that no stagnant corners, untouched by the flow of air, should be left. This is a common fault in many otherwise well ventilated buildings, but can easily be avoided if desired. The air should enter at a velocity not greater than 3 feet per second, and only at that speed when the inlet orifice is above the heads of the occupants when standing. It has been found that with a velocity of 18 inches per second no sensation of draught is felt, but as it is often necessary, in order to give the requisite supply, the higher velocity is allowable, provided that the current does not impinge upon any person. The supply of air must be regular and continuous, and should be capable of being heated or humidified if desired. The extraction, where it can possibly be arranged, should be at the floor level when warm air is entering, and near the ceiling if cold air be used. In buildings with internal walls it is better to arrange the inlets at one side, and the outlets at the other, but in the case of buildings like mills, this being impracticable, an extraction at the floor level would be preferable, and could be easily arranged.

This brings us to the question of what is known as the "plenum," or pressure system, which is based upon the compulsory injection of air into a building. For the present it will be assumed that the air to be dealt with is cold, as the question of heating will be taken up hereafter. It is, let it be

assumed, required to force into a building 50,000 cubic feet of air per minute. To do this would require a fan or blower, many types of which are in the market. This fan is placed in the basement of a building, and is in direct connection with inlet and outlet flues. The delivery flues are arranged to diverge from the main duct, and are preferably built in the walls of the building. The method of doing this is shown from the illustration given herewith of the Pacific Mill at Lawrence, Mass., which is ventilated on the Sturtevant principle. This, as you will see from Plate 1, is a mill of three floors and a basement. There are several flues connected to a fan chamber, but each flue is allocated to one of the stories, and only discharges its air into that room. A decidedly better arrangement is that shown in Plate 2, Figs. 1 to 4, in which the flues are so arranged as to discharge into each room, being reduced in area as they go up. By a special arrangement of dampers the distribution of air can be regulated at will, so that each room gets its full share of air. By building out the flues as pilasters or piers, as shown, the inside of the building remains without interference, while its strength is not impaired. If the proper arrangement of flues were shown in this drawing the exits should be on the opposite side, and when such a distribution took place the air—if heated—should enter on the coldest side of the building. These instances are given as illustrating the general principle, and are subject to modifications. The chief advantage of such an arrangement of flues is, of course, that the air is introduced into the room regularly and is well distributed. The compulsory introduction of air under a slight pressure absolutely ensures it being delivered in sufficient volume into the building, aud so long as there is any outlet it will continually flood it with a stream of fresh air. It is clear that in this way, and in this way only, is it possible to ensure the introduction of a defined quantity of air, and when it is combined with a system of extraction it gives the acme of ventilation. Several schools have been inspected by the writer in which the plenum system is combined with extraction, and the results as regards purity of air are of the highest character. The essential feature of this system, by whatsoever means carried out, is the creation of an air current distributed at such a velocity, in such a manner, and under such conditions as will

ensure the constant renewal of the foul atmosphere. It is possible to force into any building any desired quantity of air, and to ensure its absolutely even distribution throughout the whole building. This portion of the subject need not be laboured, but can be expanded in reply if desired.

We now come to the important question of heating, which requires some special consideration. In order to obtain a true comprehension of the problems involved in heating a building, the conditions require to be thoroughly understood. If the structure of the building is such that large areas can be dealt with, as is the case when a warehouse or mill is treated, then the heating becomes a simple problem. If, on the other hand, it is necessary to deal with a building sub-divided into a number of small apartments, the problem is more difficult. The difficulty, however, is not so much in kind as in degree, and a thorough investigation will show how this is so. It may be said that there are two main methods by which the accomplishment of the object is sought to be attained—by radiation and by conduction. The open fire-place or stove and radiators are examples of the former, while steam and hot water coils and heaters, and hot air systems, are examples of the latter. As a subdivision of the second method, the system of diffusion may be named. With regard to open fires and stoves, they are only permissible where comparatively small areas are to be considered, and for the purposes of this paper may be left untouched. Coming to the use of hot water or steam, it is necessary to consider the capacity of each for heating air. The question is solely one of the number of available heat units. The specific heat of air as compared with water is ·2379, so that the heat which would raise a pound of water 1° F., would heat 4·2034lbs. of air to the same extent. It follows, therefore, that the medium which contains the greatest number of heat units, is capable of heating the larger volume of air. If it be assumed that hot water at a temperature of 212° F. is used for the purpose of heating and is cooled to 80° F. prior to its return to the boiler, only 132·864° are available for heating in each pound. This would heat 558·48lbs. of air 1° F. If steam be used, the number of heat units is, although of some importance, subordinate to what may be called the condensing capacity of the steam. That is to say, that the

difference between the sensible temperature of the steam and that of air, when heated to the required extent, determines the amount of condensation which can take place. For instance, steam at 16lbs. absolute pressure has a sensible temperature of 216·3°, while that at 100lbs. absolute, is 327·57°. If the air be heated to 70° F., then the differences are 146·3° and 257·57° respectively, so that if condensation takes place in each case, followed by cooling to 70°, then the higher pressure steam will condense in the ratio of 1·75 : 1 as compared with the lower pressure steam. The heat units available are in steam at 100lbs. absolute pressure, 1213·85 — 212 (the temperature of water of condensation at atmospheric pressure) = 1001·85. One pound of this would heat 4213lbs. of air through 1° F. Now if the air be assumed to be 42° F., its weight, if dry, is ·0791lb. per cubic foot, and 4207lbs. = 53,261 cubic feet. Under the conditions named, 1lb. of the high pressure steam would heat 2305 cubic feet from 42° F. to 65° F. The table given on page 216 has been calculated in this way.

Although the theoretical value of the steam as a heater can be thus obtained with accuracy, the difficult question as to how much of this can be made available remains in doubt. It depends upon the circumstances of each case, and is not easily calculable. The circumstances affecting this problem are many and variable. In buildings in which there are rooms with inside walls and no glass, or very little, the quantity of heating area wanted is much less than in a case where—as in a textile factory—there is a large window area. The relative amount of window and wall area and the situation of the building all affect this problem. The radiation from glass is very great, and wherever its area is large the quantity of heat supplied must be proportionally great. A 4in. cast-iron pipe with an area of 1·309 square foot for each lineal foot, and ½in. thick, is computed to transmit in an hour 674 thermal units with the air at 62° F., and to condense ·99 lbs of steam at 115 lbs. absolute, having a sensible temperature of 338° F., and containing 1216·97 thermal units per lb. According to an American writer, Mr. Robert Briggs, an open pipe radiator surrounded by air at a temperature of 60° F. will lose 1·8 units per hour per square foot for each degree of difference in the temperature of the air and steam.

Number of Cubic Feet of Air which can be heated 1° F. by condensing One Pound of Steam and Cooling the Water of Condensation to 60° F.

Pounds pressure absolute.	Pounds pressure by Gauge.	Sensible Heat of Steam, ° F.	Thermal units per pound of Steam.	TEMPERATURE OF THE AIR, ° F.									
				0	10	15	20	25	32	40	45	50	55
15	0	213·1	1178·4	54510	55665	56210	56990	57570	58355	59315	59840	60385	61085
20	5	228	1182·9	54625	55780	56325	57065	57690	58480	59440	59970	60500	61200
30	15	250·4	1189·8	54960	56125	56680	57425	58055	58830	59815	60340	60885	61450
40	25	267·3	1194·9	55185	56350	56900	57650	58380	59215	60040	60570	61110	61830
50	35	281	1199·1	55410	56590	57150	57890	58515	59315	60300	60830	61370	62085
60	45	292·7	1202·7	55590	56665	57325	58080	58715	59515	60495	61030	61570	62285
70	55	302·9	1205·8	55725	56910	57465	58230	58855	59670	60640	61185	61730	62410
80	65	312	1208·5	55865	57040	57600	58355	58990	50800	60785	61315	61870	62590
90	75	320	1211·1	55990	57180	57725	58490	59130	59940	60930	61455	62015	62730
100	85	327·9	1213·4	56100	57290	57850	58615	59255	60055	61060	61555	62145	62860
110	95	334·6	1215·5	56210	57400	57950	58730	59355	60170	61140	61700	62260	62920
115	100	338	1216·5	56265	57450	58015	58780	59415	60230	61195	61760	63320	63045

This is equal to a transmission per square foot under the circumstances named of 500·4 units, which is practically equal to that given above. Accepting this basis, therefore, it will be possible to establish a comparison between low and high pressure heating. Suppose that it is desired to use exhaust steam at practically atmospheric pressure, with a temperature of 215·9, and to reduce it to 60° F., a differenc of 155·9°. The number of units thus given out per square foot during one hour would be 155·9 × 1·8 = 280·62. To obtain the condensation from this it is only necessary to divide the number of units evolved by the latent heat of steam at atmospheric pressure, which would give a condensation equal to ·29 lbs. for each square foot per hour. If the steam is at 105 lbs. absolute, a similar calculation gives a condensation of ·57 lbs. This demonstrates that there is an increased efficiency with high pressure steam, and it is necessary, therefore, to provide a much less area in that case. The quantity of heating surface required varies, as has been said, with the varying circumstances; but the following approximations will give some idea of what is wanted. One square foot of surface per 100 cubic feet is one rule. Other authorities give one square foot for each 10 square feet of glass, or for each 120 feet of wall or ceiling space. The allowances thus made can be varied judiciously, especially if appliances for inducing a rapid flow of air are employed.

Before passing on to another branch of the subject, a word or two may be said on some special points. It has been pointed out that there is a large amount of radiation from the windows of any building, and this has the tendency to cool the air rapidly as it comes in contact with them, and thus produce a cold downward current which is often mistaken for a draught. Everyone must have experienced this difficulty, and it is obvious that it will always occur, especially if the outside air is at a low temperature. The remedy for this in heating any building is obviously to apply the heat below the windows, so that a warm current passes up in front of the windows and thence enters the room. The author has seen several examples of this arrangement in schools, which are giving the best results both economically and in the maintenance of an even and sufficient temperature. More will be said about this at a later stage.

From the table given previously it will be quite easy to calculate the amount of heat required to effectually warm any apartment. Thus, if steam of 15 lbs. pressure (by gauge) be used to heat air from 40° to 60°, or a range of 20°, as 59,815 cubic feet can be raised by 1lb. of steam when cooled to 60° F., 1° in temperature $\frac{59,815}{20} = 2990{\cdot}75$ can be raised 20°. If, now, a room 300ft. by 125ft. by 12ft., containing 450,000 cubic feet, be dealt with, $\frac{450,000}{2990{\cdot}75} = 150{\cdot}4$lbs. of steam are wanted for that purpose. As the cooling goes on below 212° F., a smaller quantity of steam is required, which is always to be borne in mind. The difference in the temperature of the steam and that of the air would be 190·24°, and the number of units given out, if the steam be cooled to 60°, 342·4. Dividing this by the latent heat of steam at 15lbs., it will be found that ·364lbs. would be condensed per square foot of surface. Therefore $\frac{150{\cdot}4}{{\cdot}364} = 413$ square feet of heating surface is required for the purpose. This example will serve to show how the necessary amount can be approximately arrived at. It is customary in heating buildings to use principally one of three methods, viz., to carry pipes round each room, either above or below the floor; to fix in suitable places coils or radiators; or to suspend at a suitable height from the floor steam pipes. The first two methods are generally adopted in public and private buildings, while in textile factories the latter is practically universal. Which of the three shall be adopted in any particular case must be left to the discretion of the designer. There is a fourth method, which is adopted when the plenum system of ventilation is used, namely, that of heating the air by radiating coils at one point prior to its discharge into the room. The exact advantages of this system will be dealt with hereafter. In the meantime it may be said that in many cases the plan is meeting with great favour and success, and its adoption is proceeding with considerable rapidity.

It is now necessary to consider a question which is of great interest, and which has probably for some members, a greater importance than any other of those treated. That is the subject of humidity. There is a disposition to treat this subject as though

it was one which affected only the textile manufacturer. As a matter of fact it is one which affects all ventilation, for nothing is more injurious or less bearable than a dry heat artificially produced. Anyone who has experienced the effects of living constantly in a building in which the air is dried by the excessive application of heat, will at once admit that the result is at once disagreeable and unhealthy. In the English climate, even in dry weather, we are used to humidity, and there is little doubt that, although it has its unpleasant side, it is in the main beneficial. It will perhaps be as well, if the conclusions drawn from a number of tabulated observations made in the neighbourhood of Manchester by one of our members, Mr. Nodal, be referred to. These were reported to the United States Government by Col. Albert Shaw, who, a few years ago, was consul for that country in Manchester. It may be known to many members that this country is subjected to the influence of a series of cyclonic movements of the air, which oscillate between certain ascertainable points. The direction in which the storm centres travel, is from the Atlantic in a north-easterly direction towards Norway, and the air, in revolving round these centres, always travels, when to the southward of the direction of their movement, from west to east. The result is that Lancashire and the district about it, "receive the moist winds on their first approach from the sea, and is also subjected, in the main, to the broader belts of the southerly and westerly winds as they circulate round these passing centres. As the warm moist winds spread over the land the vapour is condensed into rain or mist, and speedily falls again in the form of rain." Mr. Nodal gives the mean of ten years' rainfall and temperature from January 1st. to June 30th, as follows:

Rainfall at Holyhead,	inches	13·73
Temperature do.	degrees F.	48
Rainfall at Shields,	inches	10·34
Temperature do.	degrees F.	45

He goes on to say, "The most sudden changes in our temperature occur at the coming and going of the cyclonic systems. As they approach us the temperature rises quickly, but our manufacturers suffer nothing from this, because the humidity of our atmosphere increases with it; but as they retire, the fall of temperature is frequently more sudden, though, perhaps, within a more limited

range * * * * * As an instance * * * I may mention the passing of a storm centre which occurred on the 26th November, 1881. It was during the passage of a large depression or storm centre, accompanied by a violent gale. At 8 A.M. on the morning of the 26th November, the wind came light from the S.S.W.; the temperature of the air was 36° and the relative humidity (assuming 1000 to represent saturation) was 910; about noon the gale commenced and the temperature had risen to 54°. At 8 P.M. the same evening no change had taken place in the temperature, but the humidity had increased to 930, the wind still blowing a hard gale from S.W. by W. Just before the shift of wind to the N.W., the temperature fell to 48° and the humidity decreased to 800. These sudden changes, especially as regards the humidity, which occur in the rear of such disturbances, is one source of trouble in our cotton mills, although as a rule but of short duration. As to our cold seasons, it not infrequently happens that during some of our severe frosts, the relative humidity is very high, being frequently found to be almost at the point of saturation, and if the wind is light for days, and sometimes for weeks together, the land is more or less enveloped in thick white mist. * * * * * If an area of high atmospheric pressure, or what is called an anti-cyclone, and which is of a comparatively stationary character, forms in our district so as to cause these strong easterly and south-easterly winds, which may last for weeks, then evaporation proceeds rapidly, and the atmosphere becomes exceedingly dry. Such a wind seriously affects the cotton manufacturers of this country; the production is reduced by at least 5 per cent., and the quality suffers to an equal if not to a greater extent." These extracts have been given because they give an accurate and lucid explanation of the fluctuations in humidity which are common in this country. According to a report furnished to Col. Shaw by the Astronomer Royal, the mean humidity per cent. from January 1881 to May 1892, was as follows:

1881.

January	86	July	76
February	88	August	84
March	80	September	90
April	75	October	86
May	75	November	87
June	72	December	89

1882.

January	89	April	82
February	88	May	75
March	82		

It is now perhaps as well to explain what is meant by the relative humidity of air. The atmosphere is capable of retaining in suspension, without deposition, a certain weight of aqueous vapour depending directly upon the temperature of the air. Thus the higher the temperature the greater weight of vapour which remains suspended. When the air is so charged with vapour that it can hold no more it is said to be saturated. The number of grains contained at any period can be ascertained and compared with that which gives saturation. Assuming the latter number to be 100, then the relative humidity is found by a comparison of the actual number of grains contained in the air with that number. In other words it is a percentage of complete saturation. The readiest way, and the one which in in actual practice is adopted, to discover the relative humidity is to employ two thermometers, the one with its bulb dry and exposed to the atmosphere, and the other with its bulb surrounded with a muslin covering kept perpetually moistened with water fed to it by the capillary action of cotton strands communicating with a vessel containing water. So long as the air is capable of absorbing by evaporation the water in the muslin covering of the bulb, the mercury in that thermometer will show a lower reading than the one with the dry bulb. By ascertaining the relative readings of the two thermometers it is easy to ascertain the amount of humidity, because complete saturation is followed by equal readings of both thermometers. By a series of experiments and calculations the weight of vapour which saturates air at a given temperature has been ascertained, so that is quite easy to find the point of saturation from tables which are published. Having got this it is only necessary to compare with the number of grains in the air at the temperature shown by the wet bulb to ascertain the relative humidity. At this point it may be well to give a word of warning as to the form of hygrometers used. A standard instrument is produced, which will serve as a model for others. Of this instrument Mr. Osborn says: "the same firm (John Davis & Sons, Derby) have produced an excellent hygrometer, in which the glass of the

tube magnifies the mercury column, so as to render the errors in taking the readings which arise from the ordinary thread-like columns, impossible with ordinary sight." The essence of a correct hygrometer is the entire separation of the reservoir of water from the dry bulb thermometer, and it should be not less than 4 inches away. In many instruments sold for this purpose the construction is such that the position of the reservoir must affect the dry bulb thermometer. An investigation by Mr. W. W. Midgely, of Bolton, has demonstrated that considerable errors exist in the ordinary commercial instruments.

Having thus stated briefly the theory upon which the science of humidity depends, we now come to its practical application. In considering this it will be as well to take as examples the appliances used in textile factories, as being best known. The crudest method, and that which was formerly the only one followed, was the injection of steam into the room by means of small jets fixed in pipes. It was the unhealthy atmosphere created by this unscientific and barbarous method which led to the enactment of the Cotton Cloth Factory Act. It is not too much to say, that although this Act was at its inception strongly opposed by the employers of the district, it has proved and will continue to prove one of the most beneficial Acts from their point of view passed in this century. For just as there is a *best* way of using steam in a steam engine so there is a *best* way of humidifying under specific circumstances. The extract which was read from Mr. Nodal's report conclusively proves that in a short time completely different conditions may prevail so far as the hygrometrical conditions are concerned. It follows therefore that any special employment of mechanical contrivances for the production of humidity may be quite right under one set of circumstances, and entirely wrong under another. It will be worth while considering, before going further, what are the true conditions which require fulfilment before a perfect result can be expected.

The existence of humidity in the atmosphere is undoubted, and it is equally clear that it is a complete mixture or incorporation, and not in one sense a mere suspension of aqueous vapour. Every unit of atmosphere contains in the same place and time an equal amount of vapour to that contained by every other

unit. The result is that on a day when saturation is nearly reached the air entering a building from without is equally charged with humidity, and when diffused—unless dried—produces an equally humid atmosphere within. Further, if the air be, as it often is, of high temperature, the weight of vapour contained may be very large. Thus complete saturation of the air at 40° F. only implies the presence of 2·9 grains per cubic foot, while at a temperature of 90° F. 14·8 grains are required to produce it. From these two facts, briefly but sufficiently stated, two things may be inferred. First, that the production of a complete incorporation of the vapour with the air is necessary to produce equal results to those obtained with air naturally humid; and second, that the amount of humidity imparted to the air must be capable of variation when required to meet varying circumstances. It follows as a natural corollary from this that when it is desired at one and the same time to preserve a high temperature along with a definite state of humidity, the air will become more easily charged if it is, prior to coming in contact with the humidifying material, heated to a suitable temperature. It is not necessary to go into any elaborate argument on this subject, as it is perfectly obvious from what has been previously said about the facts underlying it.

It was said that the injection of steam into weaving sheds was the main cause of the passage of the Cotton Cloth Factory Act. The reason for the commencement of this practice in this country was to enable the easier weaving of the heavily sized calicoes. In the United States of America, and other districts where there is a prevalent dry atmosphere, the practice of introducing humidity into the air has long been known. Further, it has been discovered that there are certain places where the extra dryness of the air seriously militates against successful manufacture. In spite of this the growth of scientific methods of humidifying has been very slow. The flooding of the floors of spinning and weaving rooms with water is a recognition of the necessity for some provision of the sort, the operation here being a slow evaporation arising from the heat of the rooms. All these plans are crude and unsatisfactory alike from the point of view of effectiveness and economy, and it is not, therefore, surprising that other modes were suggested.

As a result of the opposition to the injection of steam the Act referred to was passed, and fixed by its provisions the quantity of air to be supplied per head, and the maximum amount of humidity which was permissible. Six hundred cubic feet of fresh air per person was fixed as the air supply, and a schedule of maximum humidities was also drawn, which has been since slightly amended, the amended table being here given:—

Maximum Limits of Humidity of Atmosphere at given Temperatures.

Grains of vapour per cubic foot of air.	Dry Bulb thermom. readings. Deg. Fahr.	Wet Bulb thermom. readings. Deg. Fahr.	Percentage of Humidity. Saturation = 100.	Grains of vapour per cubic foot of air.	Dry Bulb thermom. readings. Deg. Fahr.	Wet Bulb thermom. readings. Deg. Fahr.	Percentage of Humidity. Saturation = 100.
·9	35	33	80	6·6	68	66	88
·0	36	34	82	6·9	69	67	88
·1	37	35	83	7·1	70	68	88
2·2	38	36	83	7·1	71	68·5	85·5
2·3	39	37	84	7·1	72	69	84
2·4	40	38	84	7·4	73	70	84
2·5	41	39	84	7·4	74	70·5	81·5
2·6	42	40	85	7·65	75	71·5	81·5
2·7	43	41	84	7·7	76	72	79
2·8	44	42	84	8·0	77	73	79
2·9	45	43	85	8·0	78	73·5	77
3·1	46	44	86	8·25	79	74·5	77·5
3·2	47	45	86	8·55	80	75·5	77·5
3·3	48	46	86	8·6	81	76	76
3·4	49	47	86	8·65	82	76·5	74
3·5	50	48	86	8·85	83	77·5	74
3·6	51	49	86	8·9	84	78	72
3·8	52	50	86	9·2	85	79	72
3·9	53	51	86	9·5	86	80	72
4·1	54	52	86	9·55	87	80·5	71
4·2	55	53	87	9·9	88	81·5	71
4·4	56	54	87	10·25	89	82·5	71
4·5	57	55	87	10·3	90	83	69
4·7	58	56	87	10·35	91	83·5	68
4·9	59	57	88	10·7	92	84·5	68
5·1	60	58	88	11·0	93	85·5	68
5·2	61	59	88	11·1	94	86	66
5·4	62	60	88	11·5	95	87	66
5·6	63	61	88	11·8	96	88	66
4·8	64	62	88	11·9	97	88·5	65·5
6·0	65	63	88	12·0	98	89	64
6·2	66	64	88	12·3	99	90	64
6·4	67	65	88	12·7	100	91	64

It should be carefully noted that these figures are the figures of the maximum limits and do not mean that they must be worked to. In all practical appliances for producing humidity in weaving sheds, therefore, there are two factors to be kept in view, the introduction of the defined volume of air, and the charging of it with the requisite moisture. For spinning rooms, the introduction of the air is not so essential. It can now be seen how it is proposed to effect these objects.

There are two principal opposing schools on this subject, who each employ a special set of appliances. There are first, those appliances which produce a spray by the action of an air or water jet under pressure against an emerging stream of water; the appliance being practically complete in itself and a series of the instruments being disposed about the room. In America, these are called with admirable directness "atomisers." In the second place there is that class of apparatus which charges the air with moisture prior to injecting it into the room and distributes it by means of pipes.

As an example of the first class, the apparatus shown in Plate 3 may be explained. This is Tattersall's Humidifier, and is made by the Textile Ventilating and Humidifying Co., of Accrington.

Before actually proceeding to describe the instrument itself, a few words may be spent on the method of supplying it with air and water. From a convenient point pipes are led from an air compressor to the various rooms at intervals in which the humidifiers are placed. Running parallel with these pipes are two others, one supplying water, and the other taking away the slight waste caused. The water is supplied from a central point by means of a small cistern fitted with a ball tap so as to give the necessary quantity. If required, the air can be heated by the injection of steam into the pipe supplying it. Although it forms, essentially, no part of this subject, it may be mentioned that Mr. Tattersall has invented for use with this instrument a cheap but very effective air compressor, which easily maintains a pressure of 3lbs. to the square inch. It consists of a vibrating plate centred on a rocking shaft worked by a crank and connecting rod driven from the main shaft. The plate oscillates within a chamber specially shaped to its sweep and having on each side an inlet and outlet valve. Very little power is required to drive the

compressor, and it works with great smoothness and effectiveness. The humidifier itself consists, first of an air nozzle at each side of the air délivery pipe, placed horizontally and at such a level that the current is discharged immediately above the exit orifice of the vertical water delivery nozzle. The effect is that the water which emerges, is blown into a spray, and discharged by means of the curved distributors into the room. The distributors are practically curved troughs, which give direction to the spray and lend themselves to an effective dispersal of it. At the inner end a small hole is formed by which any heavy drops are drained off and carried away as described. It will be noticed that this is an apparatus for producing a fine spray, the distribution of which can be arranged to extend over a wide area. Another spray instrument, the Drosophore, produces the necessary subdivision by the action of two water jets. Two nozzles, one descending and the other ascending, are placed exactly opposite each other. The aperture in the lower nozzle is slightly smaller than that in the upper one, but both are fed from the same source, with water at about 100lbs. pressure. The water emerging from the larger aperture is met by the ascending jet, and forced into a fine spray, while the force of the downward current is sufficient to create a rapid current of air, which, with the atomised moisture is discharged into the room, being distributed by the action of a dished plate. (See Plates 4 and 5.)

The second class of humidifying apparatus takes two forms. In the first a steam nozzle is fixed at the entrance to a tube connecting either to the outer air or the room to be treated, and by means of which a combined mixture of steam and air is injected into the building. Mr. Pye of Blackburn, makes an appliance of this nature, and in his case he distributes the combined air and vapour into the room by main pipes and branches from them. The pipes are made of galvanized iron, and are provided with outlets, the area of which can be closed by small slides in order to regulate the distribution. This device is simple and under control.

Another form is that adopted by Messrs. Jas. Howorth & Co., of Farnworth, who have long been known as ventilating engineers. They make four forms of devices for this purpose, two of them being practically of the spraying order and the

others of the absorption type. It is only necessary to describe one of the latter, which is shown in Plate 6. This consists first of a cylindrical vessel B, into which the air is drawn by the suction of a fan C placed beyond it. In this chamber the air can be heated by steam as it passes through. The hot or cold air, when taken from this chamber, is discharged by a pipe passing down the centre of a cylindrical vessel D. The pipe discharges a little above the bottom of the vessel, in which is always kept a certain depth of water, regulated by means of a ball tap, as shown at E. At the upper part of this vessel the discharge pipe leaves and is conveyed through the room which is being treated. In this pipe are placed the requisite number of discharging orifices, in each of which a small distributor is placed. The distributor is given a rotary movement by the passage of the air, so as to eject it in all directions. The effect of this arrangement is that, whether heated or not, the air is sent with great force into the water, and produces in it a considerable disturbance, being practically passed through it. The result is that the air is charged with moisture very thoroughly, and, when it leaves the vessel, contains a mixture of air and vapour in an intimate condition. The height of the second vessel is such that no drops of water can be carried over. It is quite true that there is a slight deposition of water which has not been absorbed by the air, but it is not great, and, what is important, takes place in the conveying tubes, and the water does not find its way through the distributors.

Having thus dealt with the two principal types of apparatus used, it is possible to proceed to the consideration of some points of importance. The object of humidity in a textile factory is to preserve the natural moisture in the fibre being treated, in order that it may, as far as possible, maintain its original condition. The heat of spinning-rooms in cotton mills, for instance, is such that unless there was some vapour contained in the air the amount of natural moisture, which is about 8 per cent., would very speedily be diminished. On the other hand it is equally necessary that the temperature of working should be high, in order to soften and render flexible the natural coating of wax surrounding the fibre. Whatever may be the fibre treated, it is better for the presence of moisture, and this it is which has

rendered the west coast of this country so admirably adapted for spinning. This point may be illustrated by the record of some tests of the strength of linen sail cloth when dry and wet.

Fabric A.		Fabric D.	
Moisture per cent.	Strength in Kilos.	Moisture per cent.	Strength in Kilos.
0·0	178	0·0	147
4·1	197	2·2	153
7·5	243	5·0	170
9·8	**277**	**6·7**	**203**
12·0	345	11·2	250
13·5	378	13·3	265
26·4	405	31·0	280

The thick figures represent the amount of moisture in the material as delivered.

It has, however, been pointed out that there is a difficulty in maintaining an even degree of humidity if natural means only are employed; and, further, the usual method of heating mills has the disadvantage of drying the air. The presence of heated steam pipes in a room, especially if they are filled with high pressure steam, speedily leads to a drying of the air. This property has an immediate effect upon any fibres which are dealt with in such an atmosphere. In cotton an electrical condition is created, which causes the fibres to project outside the thread or roving, and thus escape being twisted into the yarn, which is weakened thereby. Now, to avoid this trouble—which is greater abroad than in this country—humidification is absolutely necessary. It may be noted that, in the experience of a careful observer, "The admission of steam will usually increase the humidity; but in cases which have come under my notice, more heat than moisture was received into the room from the steam, and the relative humidity fell, the steam here doing injury instead of benefit, and this is a matter to be guarded

against in the use of this method of moistening." As to the exact amount of humidity to be produced in any room, this is a point upon which nothing definite can be said. The amount needed is often lower than is sometimes thought to be necessary, but there are so many circumstances which affect the problem that it is quite impossible to give even an approximate rule. If, however, the form of the humidifier be determined on, then the ascertainment of the exact conditions is easy, and requires little, if any, trouble. The only thing to be noted is that the advantage of artificial humidity is that the required degree can be obtained with exactitude independently of the ordinary meteorological fluctuations.

This subject is not without importance in other cases than textile factories. The maintenance of a definite degree of humidity in any building in which persons are employed or congregated is absolutely necessary to comfort and health. In a humid atmosphere the exhalations from the skin are, although possibly more noticeable, not so great, and this is of immense importance in public buildings. In factories where dusty employments are followed, the presence of a humid atmosphere would decrease the quantity of dust. The peculiar smell and taste of air which is heated by means of iron tubes or furnaces has probably been experienced by all, and the evil effects of such an atmosphere are many and various. In all these cases the provision of humidity is absolutely necessary if a real success is to be attained. With regard to the question of air supply, this will, of course, vary with the circumstances. In buildings such as schools it should always be derived from without, and be filtered prior to heating. In textile mills, owing to the large capacity of the rooms, not quite such a volume of fresh air is required, and it is the least in spinning rooms, where the number of people employed is comparatively small. The air of these rooms is therefore in part humidified several times, but in each case the provision of a certain volume of fresh air is necessary. The element of cost, provided efficiency is obtained, is most important, and the repeated use of the air is therefore permissible.

This brings us to the final point of this paper and to the question—What is the true system of ventilation? It has

been shown that the three subjects of ventilation, heating, and humidifying, are closely connected. If a system can be produced which enables all these three objects to be attained simultaneously, a great gain accrues. It is proposed, therefore, to put into concrete shape the best practice and to describe what is the most perfect system known. In the early part of this paper it was indicated that there were two main methods of ventilation other than the haphazard mode facetiously called "natural ventilation." These are exhaustion or aspiration and the plenum or pressure system. Each of these has been tried separately and in combination, and, in the opinion of the author, the best results are got by the latter method. It is proposed, therefore, to give a brief description of one or two school buildings so ventilated. In this country we have no organised system of ventilation adopted as a standard by our Government departments. Our American cousins, whose care of their schools is notorious, are much more drastic in this respect. The law in Massachussetts is substantially as follows:

> To guarantee to furnish at least 30 cubic feet of fresh, properly warmed and circulated air per minute for each pupil, allowing any given number, say 50, pupils to each room, and to remove an equal quantity of vitiated air per minute for each pupil. To maintain a temperature of at least 70° in each room in the coldest weather, the temperature not to vary more than 3° between any two points in the room on the same level at the same time. The whole to be done subject to the approval of the State inspector of public buildings for the district in which the building is situated; said inspector to examine and give a written approval of the work before more than one-half the contract price is paid to the contractor or his agent.

It may be asserted that if some of our architects were brought face to face with such a law, they would have to take some pains to get out of that condition of blissful ignorance on this subject which is at present their lot. In Plate 7, the plan is given of the proposed ventilation on the Sturtevant plan for a school for 1200 children, designed on the central hall and class-room principle, by Messrs. J. W. and R. F. Beaumont, of Manchester. In the basement is fixed a gas engine, driving a large fan drawing its air from above the floor level and discharging it into a large heating chamber, in which a number of steam coils are placed. The air is taken from the heating chamber to distributing ducts built in the walls, a cold air system being also provided, by

which the heated air can be reduced in temperature or cold air only introduced. The air is discharged into the room by an outlet placed about 8 feet above the floor level. The extract ducts adjoin the admission ducts, and remove the air at the floor level by an outlet so provided. This will give a general idea of the arrangement of ducts and of the system. It is supplemented by an illustration of an arrangement of the Blackman-Smead system of ventilation, which has some special points. This is shown in Plate 8. It will be seen that in the basement the air is admitted by louvres, and is, after being passed through a wet screen, drawn through a heater consisting of a number of tubes heated by a furnace. Two Blackman propellers are placed beyond this point, one drawing air through the warmer, and the other through the entrance chamber. Thus there are, as in the preceding case, two currents created, one of cold and the other of warmed air, and the two ducts necessary are carried forward, and discharge into the conveying flues out of which the openings into the rooms branch. These openings are about 8 feet from the floor level. By means of valves controlled in each room, the supply of cold air can be shut off without diminishing the volume delivered. This plan enables the temperature in any room to be easily regulated at will. In another arrangement under this system, a mixing chamber is employed in the basement, by means of which the temperature of the air distributed can be regulated from one point. Another instance from English practice may be given. Some time ago, the author inspected the Waverley Road Board School, Birmingham, which is one of the most admirable higher grade schools in existence. In this school manual wood-working, mechanical drawing, mechanics, and practical and theoretical chemistry are taught to boys, and there is in addition, a special section for girls. The central hall has class-rooms opening out of it on each side, and is ventilated by means of air entering at each side through double radiators under the windows looking into the class-rooms. The latter are provided with a similar arrangement for each. This system of admission is adopted throughout the school, and the radiator warms the air in winter, while acting as an inlet for cold fresh air in summer. The height of the inlets from the floor is about 4 feet and they discharge upwards. The exit of the air is arranged to be at the floor

level in winter and at the ceiling in summer, and care is taken to distribute the outlets and make them of ample area in order to avoid any draughts such as are caused when the outlets are in one position. The outlet ducts are coupled to a central extractor shaft, which is tastefully worked up in an inexpensive manner into an architectural feature. In the chemical laboratory the admission of air is of the same character, but below the floor flues coupled to the fuming muffles and the extractor shaft are formed. The result is that the air is always pure even if a large number of students are at work at once. The air is injected by means of a large fan driven by a gas engine, and is sufficient in volume to change all the cubical contents in 15 minutes. In all the most recent Birmingham Schools this system of injection and extraction combined is used with most satisfactory results. The author is much indebted to Messrs. Martin and Chamberlain, architects to the Birmingham School Board, for the trouble they took in letting him see several of these schools, and for information given.

In carrying out work of this kind there are a few points which are necessary to be borne in mind. It is desirable that all the details of the plan should be considered before beginning, because the proper position of the ducts can only then be fixed. These should be made of ample size so as to restrict the velocity of the air current within them. No greater velocity than 600 feet per minute should be given to the air in the ducts, and its exit should be made at a velocity not exceeding 200 feet per minute. In altering the direction of the ducts, or in forming branches, curves should be adopted and angular corners in every case avoided. The inlets from the ducts—if used—should be covered with strong wire net-work, but grates which restrict the area must in every case be avoided. The size of the inlet and outlet apertures is important. If the former are restricted the entrance of the air is impeded, while if the latter are too small the exit of the air is difficult. If the plenum system is adopted it is better to have the exits smaller than the inlets, as by this means a slight pressure within the building is created. When a combined plenum and exhaustion system is used then the reverse of these dimensions should be adopted, as in that case a constant and steady flow of air is kept up without

draughts, and a good deal of weight is taken off the fan. A recent American writer on this subject says, "By the plenum method of forcing air into a room, without adequate means of circulating and removing it, a large number of experiments by the inspectors (State officials) have demonstrated that there is a large amount of both heat and fresh air wasted by escape through the outer walls and ceiling without circulating through the room. A strong exhaust without provision for introducing a proper supply of warm air is objectionable on the ground of economy in heating, and also in being unable to maintain an even temperature in all parts of the room. A large number of tests show that the best results are obtained by a judicious combination of the plenum and exhaust methods." In placing radiators or steam heating coils in a room, experience has shown that by placing them a little above the top of the opening from the air duct better results are obtained. It is desirable to provide means for regulating the exhaust by closing the apertures and thus diminishing the amount of air exhausted. If a central heater is used the air should be raised to about 55° F., and, if required to be further heated, should be dealt with by means of coils or radiators at the outlets. In the opinion of the author, hot water under pressure is the most convenient method for schools and public buildings, next to which may be placed low pressure steam. Air heated by means of a furnace is most objectionable. It may be worth mentioning that in schools where the system just described is used, the cloakrooms can be arranged with double hat and cloak rails placed over inlets in the floor, so that the air passes between the rails and effectually dries the clothes hung on them. The admission of air without heating, as in the case of Tobin's tubes, is absurd and extremely wasteful of fuel.

A few words may be said on this question as affecting the health of persons under ordinary conditions of ventilation. The first rough investigation into this matter was made by Dr. Angus Smith, who analysed the air from various public and private places with a view of ascertaining the quantity of carbonic acid contained therein. The science of bacteriology has practically developed since his day, and we now know that there may be floating about in the air organisms far more deadly and

pernicious than carbonic acid. It is a clearly ascertained fact that the presence of human beings leads to the emanation of large quantities of minute organisms, especially in certain states of health. Drs. Carnelly, Haldane, and Anderson have found from analyses of the air of a number of Dundee schoolrooms as many as 169 micro-organisms per litre of air to exist. Similar analyses made by Professor Bedson, in Newcastle, showed the presence of 224 per litre. It is not necessary to describe in detail the method of ascertaining the number, it being sufficient to say that it is effected by their cultivation on previously sterilised gelatine. It may, however, be stated that, taking the mean of 18 Board Schools in Dundee which are "naturally" ventilated, the three gentlemen named found 20 parts of carbonic acid in 10,000 parts of air, 17·4 parts of organic matter, and 127 micro-organisms per litre. The last results obtained in Edinburgh, according to Mr. Cosmo Burton, were, taking a mean of 10 schools, 13·4 parts of carbonic acid per 10,000, 8·3 of organic matter, and 47 micro-organisms per litre. Without labouring these figures it is abundantly clear that the state of the air in the best schools—even in the comparatively pure air of Edinburgh—is bad, while in the worst it is difficult to find a name for it. The result of modern science is to demonstrate that the so-called "natural" system of ventilation does not purify the air, but leaves it in a foul condition. Mr. Robson well says "The removal (or attempted removal) of heated or vitiated air from a room by means of an aperture or flue is often supposed to be ventilation. It is only a part—a necessary part—of ventilation. . . . . No system can be really good which does not contemplate a continual removal of foul, and the supply of fresh, air to the room."

The alternative systems of heating by the radiation from hot water or steam coils, although fairly effective, has the disadvantage that it does not keep the air so pure as does the system of heat conduction. A series of observations made in Dundee, Aberdeen, Edinburgh, and Newcastle, show that the number of micro-organisms is much greater in each litre of air in schools heated by radiation than in those in which the heat is conducted. As this is one of the most important matters in connection with the subject, it may be dealt with in some

detail, even at the risk of lengthening this paper. In this subject, as in many others connected with educational policy, the Scotch Boards have led the way, and the example they have set has been, and is being, extensively followed. To Mr. William Cunningham, of Dundee, an able engineer, belongs the credit of having pushed this matter to the front, and of being the first person to give it practical form. In a report furnished to the Dundee School Board by Dr. Carnelly, in 1888, at their request, the circumstances of 150 schools being personally investigated, and reports from 178 others received; and nothing can be better than to state in a condensed form the recommendation of Dr. Carnelly, which have since received the imprimatur of many other distinguished scientific authorities.

"For new schools mechanical ventilation should be employed.

1st.—Because it is more comfortable, the room being kept warmer, and the temperature more uniform and more equally distributed, whilst draughts are, as far as possible, avoided.

2nd.—Because it is much healthier, and prevents the spread of infectious diseases, owing to the rooms being supplied with purer air.

3rd.—Because the children by it are enabled to derive greater benefit from their education.

4th.—Because it increases their grant earning power without increasing the labour of earning the grant.

5th.—Because it increases the teaching power of the teacher.

The extra cost of mechanical ventilation over and above that of ordinary methods (including both annual expenses and interest on first cost) is about £39 a year in a school for 1,000 children, or 9½ per head of accommodation. For a school of 1500 children the cost would be only three-fourths of the above.

Part of the cost could be met quite easily by reducing the customary height of the rooms by one or two feet. This reduction in height would not at all detract from the health or comfort of the children. Thus, a reduction of the usual height of the rooms by one foot would, at 2d. per cubic foot, reduce the first cost of the school by about £70 on a school for 1,000 children, or 1s. 6d. per head." As a matter of fact the costs

thus stated, although accurate at the time they were published, are somewhat in excess of the cost at the present day.

"The following table is a comparison of the results obtained in naturally ventilated with those obtained in mechanically ventilated schools (taken as a unity), and shows that the latter is more effective":—

Excess over Outside Air.	Dundee Schools. (Carnelly, Haldane, and Anderson.)		Aberdeen Schools. (Brazier and Thomson.)	
	Mechanically Ventilated.	Naturally Ventilated.	Mechanically Ventilated.	Naturally Ventilated.
Temperature	1	0·66	1	0·9
Carbonic Acid.....	1	1·7	1	1·6
Organic Matter	1	7·0	..	..
Micro-organisms	1	9·2	1	7·2

In the report of Mr. Osborn previously quoted, the following passage occurs:—"Bury deserves mention as the first district to complete satisfactory arrangements, and Dr. Barr, the experienced certifying surgeon, and medical officer to the Rural Authority there, in his report last year to the Board drew attention to the improved condition of the cotton cloth sheds in his district, and from my knowledge of his scientific accuracy and his skill in matters of public health, I urged him to carry out on a more extended scale a comparative analysis of air.

This he has done in 12 spinning rooms, 12 cotton cloth sheds, 12 weaving sheds not under the Act, and twelve elementary schoolrooms; and kindly allows me to make use, in anticipation of his report, of the general average of carbon dioxide (CO_2) in each class.

I may premise that in the case of each room he took the mean of three careful tests by Pettenkofers's method, and I subjoin the table:—

Average number of parts of carbon dioxide (CO_2) per 100 parts of air.			
12 Spinning Rooms.	12 Cotton Cloth Sheds.	12 Dry Weaving Sheds.	12 Schoolrooms.
·95	1·16	2·34	2·35

The normal ratio of CO_2 to the atmosphere is taken at ·4 per 1000 parts, and the quantity present in any atmosphere is generally accepted as a rough index of its quality, to fully test which, of course, requires the micro-organisms to be analysed by the microscope and gelatine plates.

From the above table it will be seen that spinning rooms, as might be expected from the smaller numbers employed in them, have the best air, while the dry sheds and schools show worst. It is, of course, never fair to push "average" to extremes, though it is the idol of the statistician, and I therefore give the best and worst examples in each class—

	Spinning Rooms.	Cotton Cloth Sheds.	Dry Sheds.	Schoolrooms.
Best.....	·65	·64	1·35	·64
Worst....	1·55	2·08	3·64	6·15

from which it will be seen that the worst humidified shed is thrice as good as the worst shoolroom, which must be described as simply shocking, and a sharp contrast to the advance in America in these matters, where, as in Massachussets, 30 cubic feet of fresh air per minute is the statutory quantity for each child."

This extract furnishes an answer to those critics who have objected to Dr. Carnelley's report as that of an enthusiast with a strong bias in one direction.

In concluding this paper, which has run out to a length much greater than expected, although by no means exhaustive, it will perhaps be well to draw a few summarised conclusions.

1st.—Ventilation is most effectively performed by a system of mechanical propulsion combined with some means of exhaustion.

2nd.—Warming ought to be effected, at least partially, before the diffusion of the air in the room, and should not be left to be performed subsequently.

3rd.—Humidification is best performed by charging the incoming air with moisture and distributing the mixture.

The net effect of these three conclusions is, that in any scheme for humidifying, it is as easy to provide also for heating and ventilation in combination with it as it is to provide it separately. The present division of the work into three sections, may, therefore, be looked on as an anachronism, and the employment of steam pipes to heat the air are absolutely unnecessary. The object aimed at can be more easily attained by heating and humidifying the air prior to its discharge into the room, and this course has been followed in at least one case with conspicuous success. A large sized cardroom has been kept at a uniform temperature and in a uniform condition of humidity without difficulty by adopting this system, although it has not a single steam pipe in it. As a last word, it may be said that the subject is of immense importance educationally. The Act referred to has rendered work in weaving sheds at once more profitable and more healthy, and the experience justifies us in urging upon the authorities the necessity for giving the children the same benefit. The *mens sana* is of no use without the *corpore sano*, and it is for the latter addition to the present programme that a plea is entered.

DISCUSSION.

The PRESIDENT (Mr. T. Daniels) expressed his appreciation of the admirable manner in which the Author had submitted the subject before the Association.

Mr. HENRY WEBB said he was glad this important subject had been brought before the Association, and the author had very carefully and impartially detailed the various points of the subject.

Notwithstanding all the attention supposed to have been paid to the question of ventilation, until quite recently it was in its infancy, and even now it had not attained anything like maturity. He cordially agreed with almost all that was contained in the paper, and readily endorsed the conclusions arrived at. There were, however, a few minor criticisms which he would venture to make by way of opening the discussion. He agreed with the remark that "600 cubic feet per person had been found sufficient." This quantity was given in evidence before the Commission by a Lancashire man, and experience had proved that, in textile manufactures, the estimate was correct. He could not assent to the remarks on page 210, as to the ventilation of the card-room. The author treated them to a little ancient history and then recommended its adoption. Hoods over cards were tried long ago and had been discarded. Nor could he see how a duct below the machine could be allowed, as the draught necessary to draw the dust away would be fatal to the working of the machine, it would draw the fibres of the cotton away from the cylinder and spoil the "sliver" as far as he could tell from his limited experience. Hence the sides of the carding engine were a perfect fit and in fixing to the floor great care was taken by means of beading and cement to keep away all draughts. On page 224, referring to humidity, the author says, "since slightly amended." Would it not be better to say extended, as it was originally from 60° to 95°. This had been raised to 100° and extended below 60°, but who spins or weaves below the latter figure? The author stated (page 225) "for spinning rooms, the introduction of the air is not so esential." This must not be

misunderstood. For good spinning it was essential, as had been found by spinners to their cost during the present year. From February to end of May there were dry east winds, and from then up to October an exceptionally hot dry summer, and the spinners lot in consequence had been anything but a happy one.

The fact of the matter was, that the prevailing moist air of South-West Lancashire made the county the best in the world for spinning cotton. Therefore, by artificial humidity, it was essential to keep the air always in the state that was best for perfect spinning, and soon very few mills would be without that apparatus.

He thought it was hardly correct to say (page 229) "as to the exact amount of humidity . . . . nothing definite could be said," It would perhaps not be wise for the author to say what he knew about that fact or attempt to tabulate. However, any manager worth calling such, would soon ascertain, and tabulate the temperature and humidity required for American or Egyptian cotton, fine or coarse counts, for either spinning or weaving.

As regards the statement that steam pipes were unnecessary, (page 238) he might remark that he knew of some places where the steam pipes were not used during working hours.

In reference to ventilation, American practice had been alluded to, and undoubtedly they had paid great attention to that subject. The conditions, however, between England and America were so different that comparisons were useless, as in the latter country they had winters intensely cold and summers extremely hot. The speaker concluded his remarks by indicating his opinion as to the best system of house ventilation.

Mr. J. D. Sutcliffe said the City Analyst (Mr. Estcourt) last week tested for him some samples of air from a country school, and after finishing them he took a sample from Albert-square, and found it contained 4½ parts of CO_2 in 10,000.

The Cotton Cloth Factories' Act had been so successful because the inspector had not been satisfied with the 600 cubic feet specified by the Act, and it would be found that each shed was supplied with nearly 2,000 feet per head. Even this was insufficient for ideal ventilation, the actual quantity per adult being 3,750 feet.

As to the movement of air and its speed, he might mention the fact, that in many Lancashire gassing rooms the air was changed 60 times per hour. The gas flame produced by a Bunsen Burner was so sensitive that no draught could be tolerated. The inlets were so arranged, that practically, the whole body of air in the room rose at once to the fans in the roof. The author's reference to Peel Mills and card-rooms, had been alluded to by Mr. Webb. He thought the latter gentleman was right in his condemnation of hoods and tubes over the cards. They had been repeatedly tried, but their interference with the light and the working of the cards generally, necessitated their abandonment after a few months' trial. The method recommended of carrying the dust downwards was excellent, but it was necessary to form suitable channels during the erection of the mill.

During the summer, he, with the author's brother, inspected a mill so arranged at Freiburg, in the Black Forest, and the cardroom was undoubtedly the cleanest he had seen.

He thought the author was mistaken in advising the inlets on one side of the room, and the outlets on the other. The Chief of the Massachussetts' Police, who had charge of the ventilation of public buildings, sent the speaker particulars of some tests made. A room with glass sides was formed, and air and smoke mixed were forced into the room at various points and exhausted at various other points, the behaviour of the smoke being carefully watched. The conclusions come to were, that the best distribution of air was obtained when the inlets were arranged about 7 feet from the floor on one side of the room and the air exhausted at the floor level on the same side.

With regard to the humidifying question, the spray described was really a mechanical continuation of a very old plan, when men were constantly taking water in their mouths and spraying it out into the room. In this practice, according to Mr. Osborn, the men became very adept, and could disperse the finest spray. The chief fault of all water spray systems (if the inventors would admit a fault) was that the water and air had only a mechanical admixture, and not a chemical one, so that if the temperature fell suddenly, there was a strong tendency to deposit moisture in the immediate vicinity of the humidifiers.

The second class described, were admirable for cold weather, as warming, ventilating and humidifying could be effected with the same apparatus. For warm weather, however, they were worse than useless, as they continually increased the temperature.

The excellent selection made from Col. Shaw's report, showed that they had an average humidity for the year of over 80%, and as 70% to 75% of moisture was considered a suitable spinning and weaving atmosphere, he would like to ask how it was that they were so stupid as to exclude this atmosphere carefully from our mills? If fans were arranged to draw the outside air into the room through suitable openings, the naturally humid outside air would serve a very useful purpose.

The author thought that the Section 2, Plate 2, was a good arrangement for a factory. The speaker, however, hoped that none of his audience would be rash enough to follow the plan, because he had just, at a heavy cost, had to alter an exactly similar arrangement. When one vertical air duct supplied several stories, they might be sure that the air would rush to the top, and actual practice had proved that instead of the air passing out into the rooms on ground and first floor it actually entered the duct from the rooms. The force of the air current acted like an injector when passing what should be the outlets. The plan was also deficient in that it showed no extraction, and he agreed with the author when he maintained that no system could be satisfactory which did not combine propulsion with exhaust.

With regard to the question of direct warming by means of a furnace, he thought it could not be dismissed with the few remarks made by the author. If air was overheated by a furnace, or by any other means, it was objectionable, but he claimed that if the air were passed quickly through such an air warmer as that indicated on Plate 6, and the air was not heated to more than 140°, there could be no objection to it. Again, the cost of producing warm air with such a heater was only one-third the cost of producing it by steam or hot water. Further, there was no danger from explosion with air warmers and there were no pipes to freeze or burst. Directly the fire was lighted, warm air passed into the rooms and in one hour from the time the fire was lighted the rooms were comfortably warm. With steam, on the contrary,

several hours elapse ere the pipes were warm, and those of them who attended churches knew how cold they were even when steam or hot water had been passing through the pipes for days. But the economy of the air warmer was its strongest point, and it was only necessary to add that three-fourths of the force generated by the burning of fuel in steam apparatus were lost in the form of mechanical motion, and did not appear as temperature, whilst seven-eighths appeared in the room as temperature in a properly constructed air warmer.

In conclusion, he would like to mention that he offered these few criticisms in the most friendly spirit, and that otherwise he felt deeply indebted to the author for his very able paper.

Mr. Hans Renold contrasted the indifferent ventilation which was present in most English workshops, with the excellent manner in which it was applied in American iron works and other places, and pointed out the admirable work which the Sturtevant Co. were doing in this direction.

The system of the Sturtevant Co. would be adopted in the new Municipal Technical School of Manchester, a decision, he said, which had been arrived at after the most exhaustive enquiries throughout England.

Mr. W. Hanmer (of the Drosophore Co.) ventured to say that there were a great many makers of Humidifiers who would readily be able to state the exact amount of humidity that would be required in any room to obtain the best results. As regards the combination of the three systems, humidifying, ventilation and heating, wherever that had been tried in this country it had been unsuccessful. The cause of the failure of the combined systems was, he imagined, attributable to the fact that when adopted in spinning rooms, steam was used and consequently a great amount of heat was created. He fully believed that it was impossible for the three systems to be effectively combined.

Mr. James Walthew asked if there were any ready means for effectively indicating as to whether a room was efficiently ventilated or the reverse.

Mr. NASMITH after briefly acknowledging the vote of thanks said there was little to reply to in the criticisms made by various speakers, and in one or two cases they had answered one another. For instance Mr. Webb doubted the success of downward extraction for card rooms, but Mr. Sutcliffe had given an actual case. It might be taken for granted that extraction at the floor level was generally best, but in some cases where a great deal of dust or fly was emitted it might be better to draw the air up. The chief evil of such a course was that the air in or near the floor level was apt to be very foul and not hot enough. Still each case required special study, and care had been taken not to dogmatise, but rather to suggest.

With regard to Mr. Sutcliffe's remarks he differed from him with respect to his advocacy of furnace-heated iron pipes, and saw no reason to alter his opinion, although it was probably true that their bad effects were less felt when air was driven through the pipes rapidly by a blower or fan.

So far as humidity was concerned, what was said was that "it was impossible to give an approximate rule." To that statement he adhered, but wished to say that what was meant was, as the context showed, that no rule applicable to all cases was forthcoming. While on this point it might be mentioned that an injustice had been done to Mr. Pye, who, as the cross section of his injecting apparatus given in Plate 9 showed, did provide a water jet which could be used if desired. The illustration (see Plate 9) was very clear and explained itself, so that it was not necessary to go into an elaborate explanation.

In answer to Mr. Walthew he knew of nothing except a thermometer, and the sense of oppression, which would indicate whether a room was effectively ventilated or not. The remarks of Mr. Renold were in his opinion marked by an Anglo-phobic spirit, and he had only to say that being conversant with the Sturtevant system he had seen instances of ventilation, designed by English architects, and carried out by English engineers which were as perfect as was possible, and quite equal to anything which had been done elsewhere.

On the motion of the President a cordial vote of thanks was passed, by acclamation, to Mr. Nasmith for his paper.

VENTILATION, HEATING AND HUMIDITY.

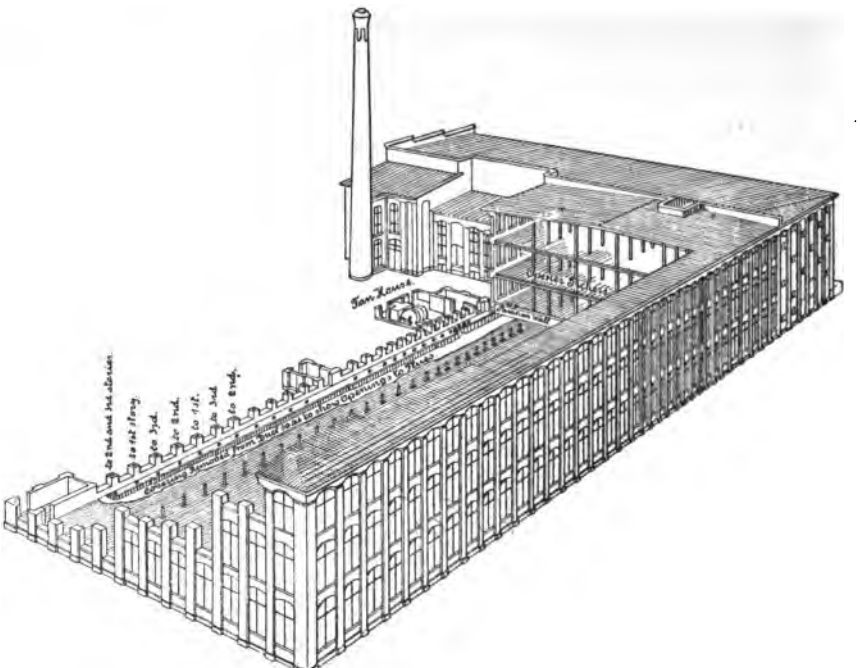

PACIFIC MILL.

UNIV. OF MICH.

Fig. 1.

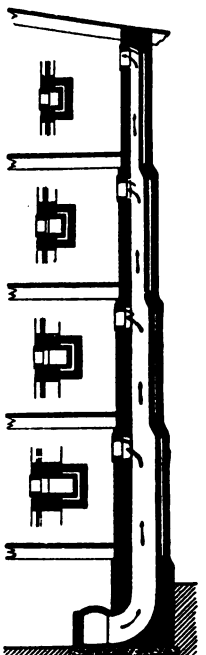

Fig. 2.

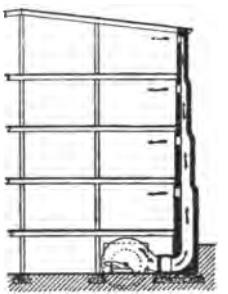

Fig 3.

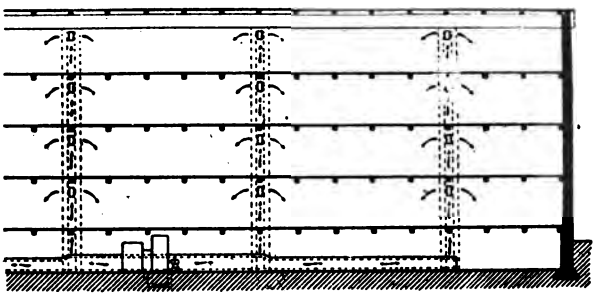

Fig. 4.

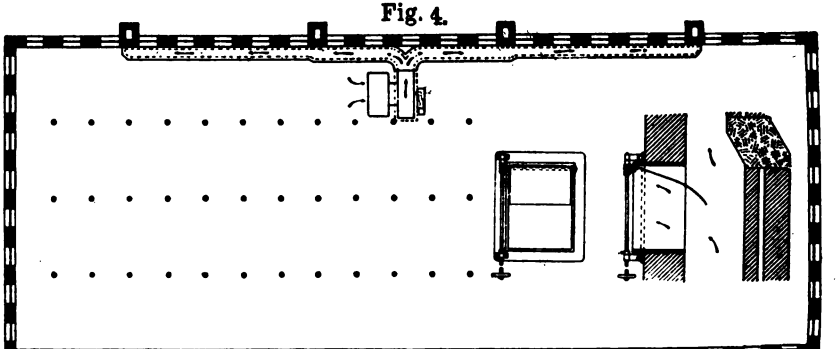

PROPOSED VENTILATION FOR MILL. SECTIONS OF MILL. FIGS 1, 2, 3 & 4.

UNIV. OF MICH.

Fig. 1.

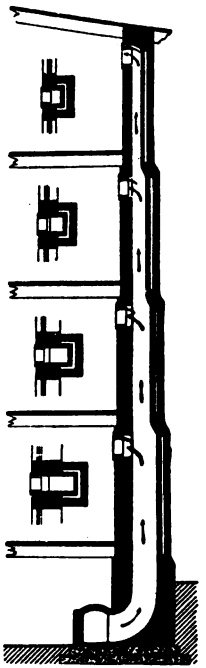

Fig. 2.

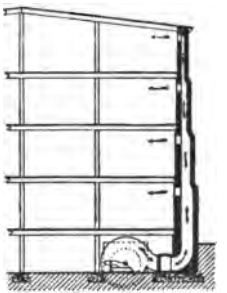

Fig 3.

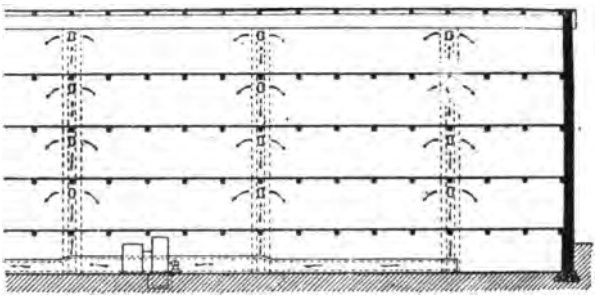

Fig. 4.

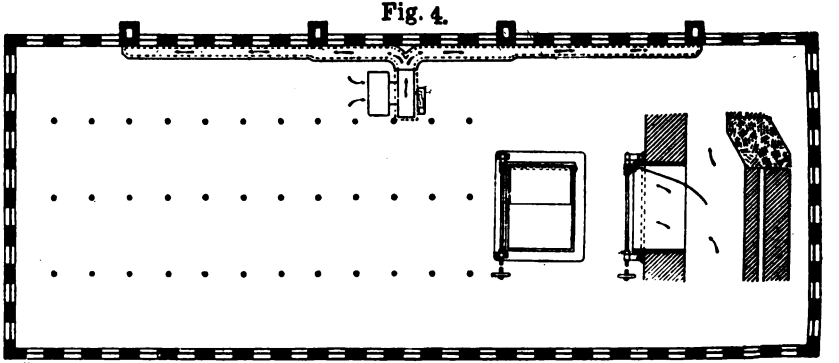

PROPOSED VENTILATION FOR MILL. SECTIONS OF MILL. FIGS 1, 2, 3 & 4.

UNIV. OF MICH.

VENTILATION, HEATING AND HUMIDITY.

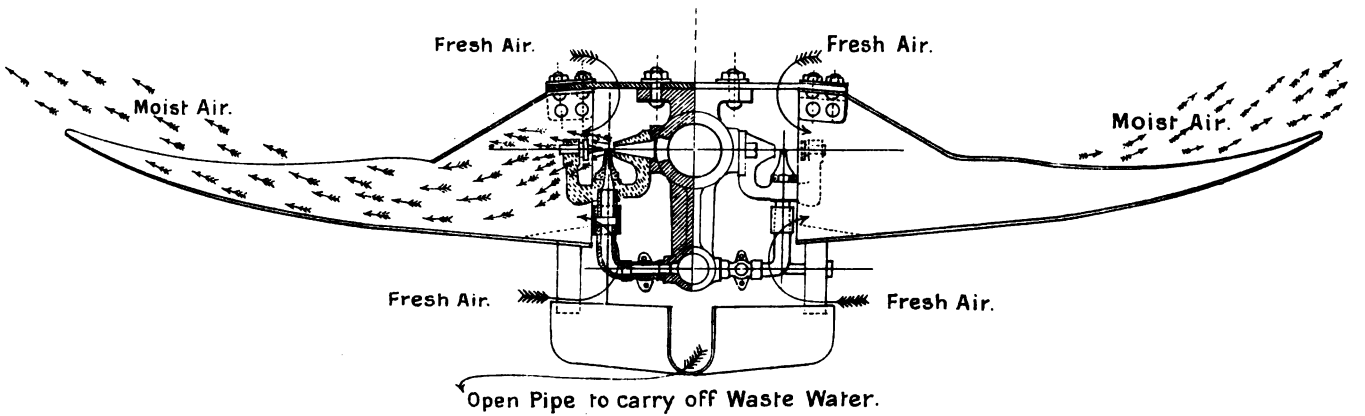

TATTERSALL'S HUMIDIFIER.

VENTILATION, HEATING AND HUMIDITY.

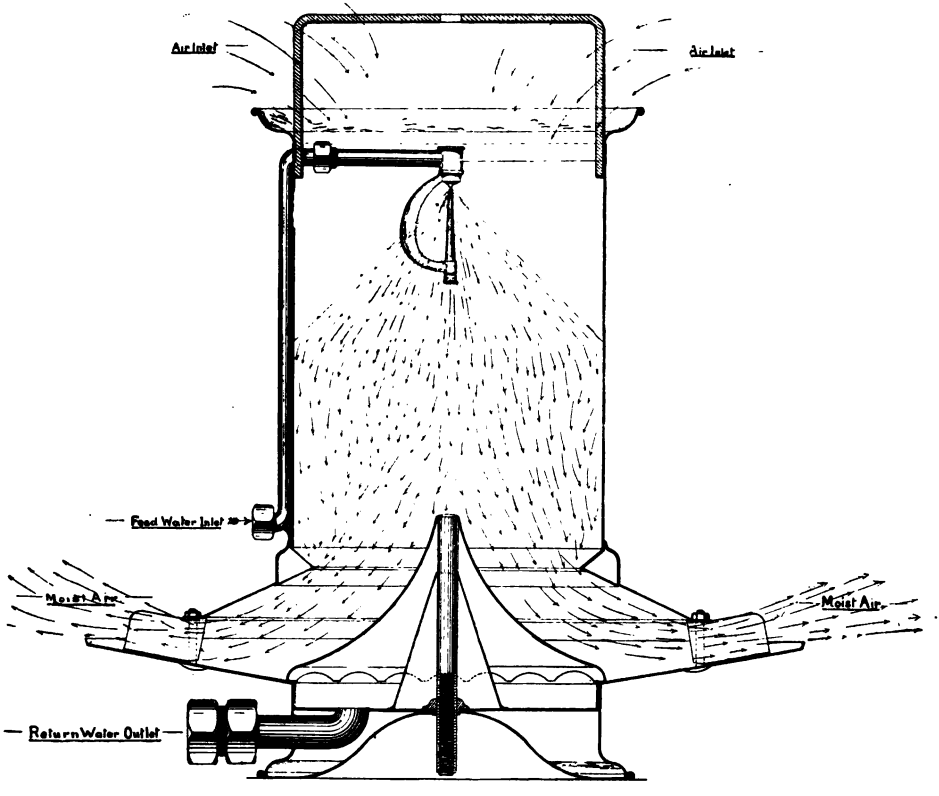

DROSOPHORE HUMIDIFIER.

UNIV. OF MICH.

DRIV. OF MICH.

VENTILATION, HEATING AND HUMIDITY.

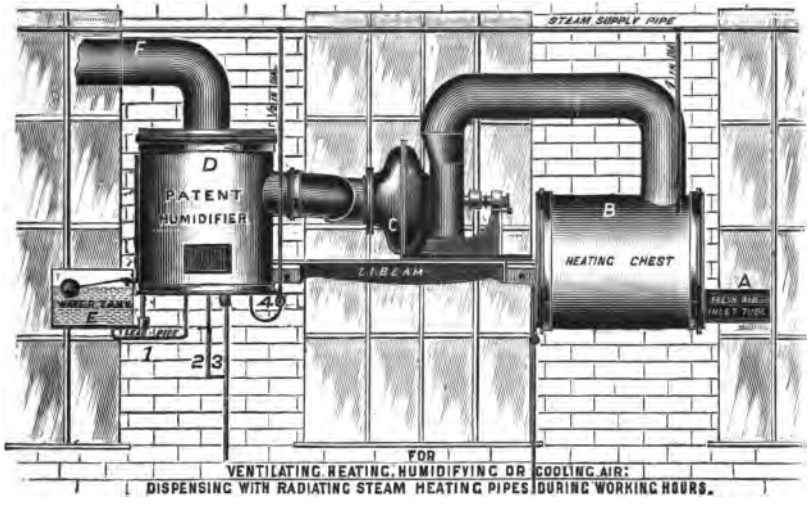

HOWORTH'S HUMIDIFIER.

UNIV. OF MICH.

VENTILATION, HEATING AND HUMIDITY.

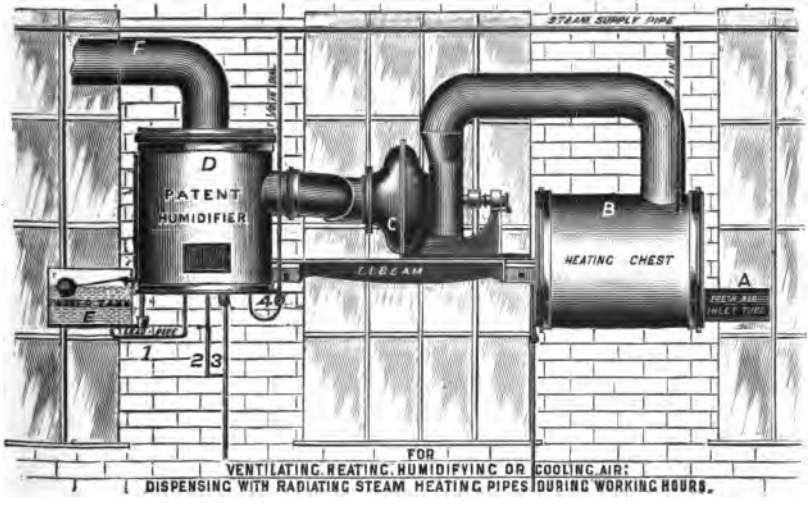

HOWORTH'S HUMIDIFIER.

UNIV. OF MICH.

UNIV.

VENTILATION, HE

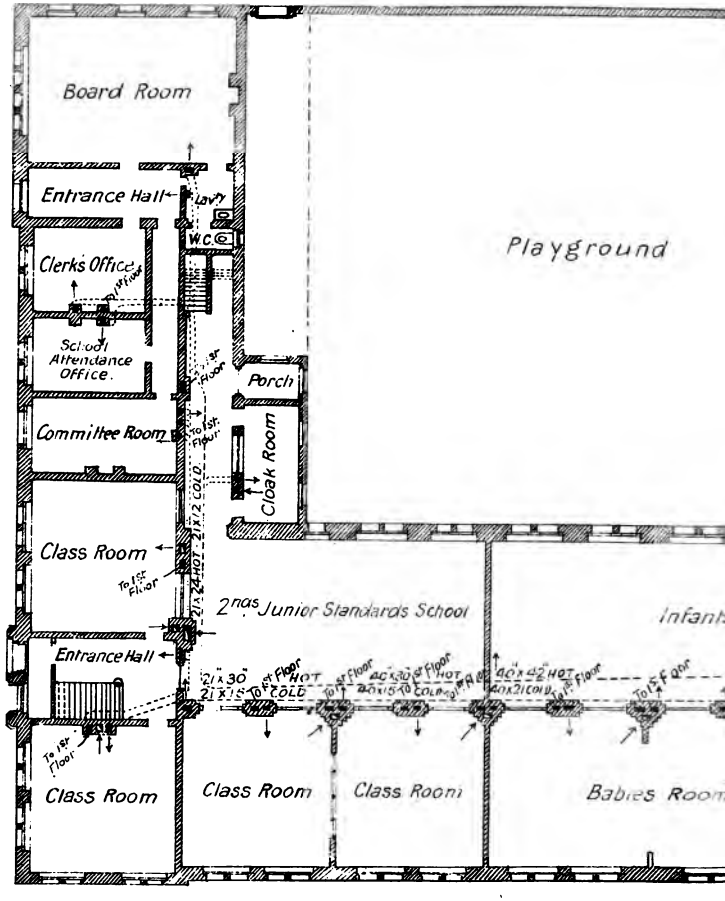

GROUND FLOOR PL

Scale of 10 5 0 10 20 30 40 50 60 70 80 90 feet.

PROPOSED PLAN OF

PLANS SHEWING THE STURTEVANT SYSTEM OF VENTILATION & HEATING.

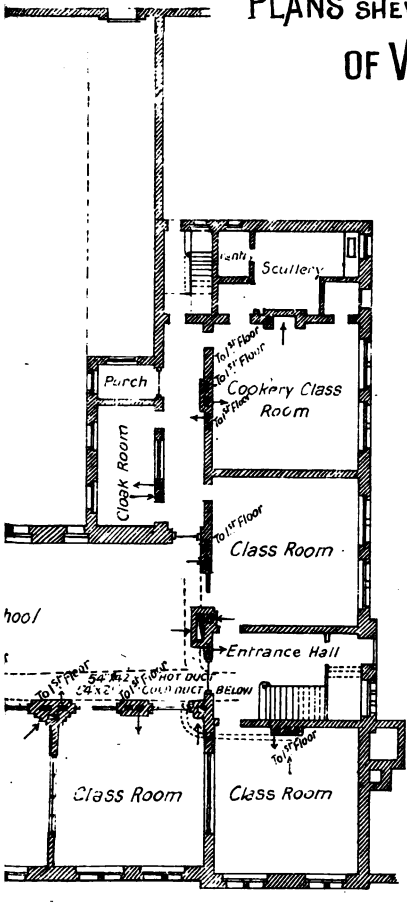

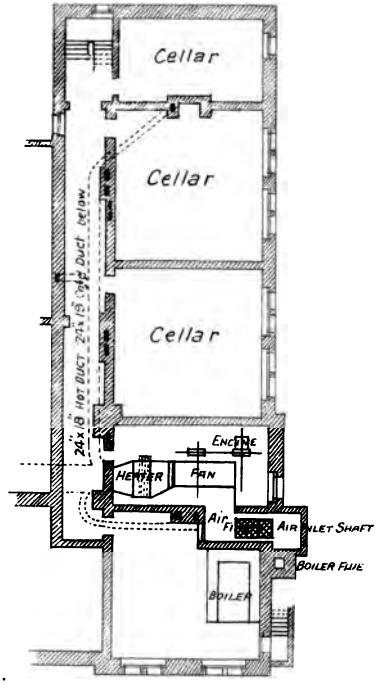

BASEMENT PLAN

UNIV. OF MICH.

VENTILATION, HEATING AND HUMIDITY.

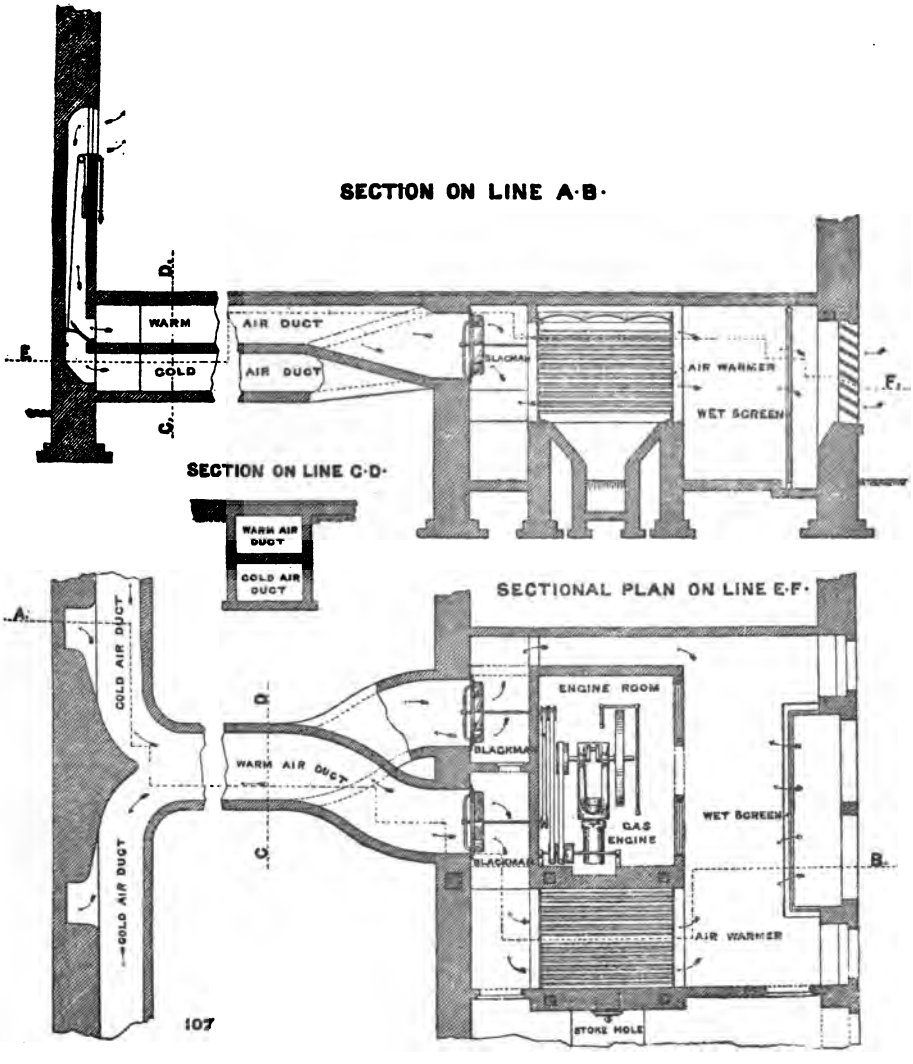

PLAN AND SECTION OF BLACKMAN–SMEAD SYSTEM

UNIV. OF MICH.

VENTILATION, HEATING AND HUMIDITY.

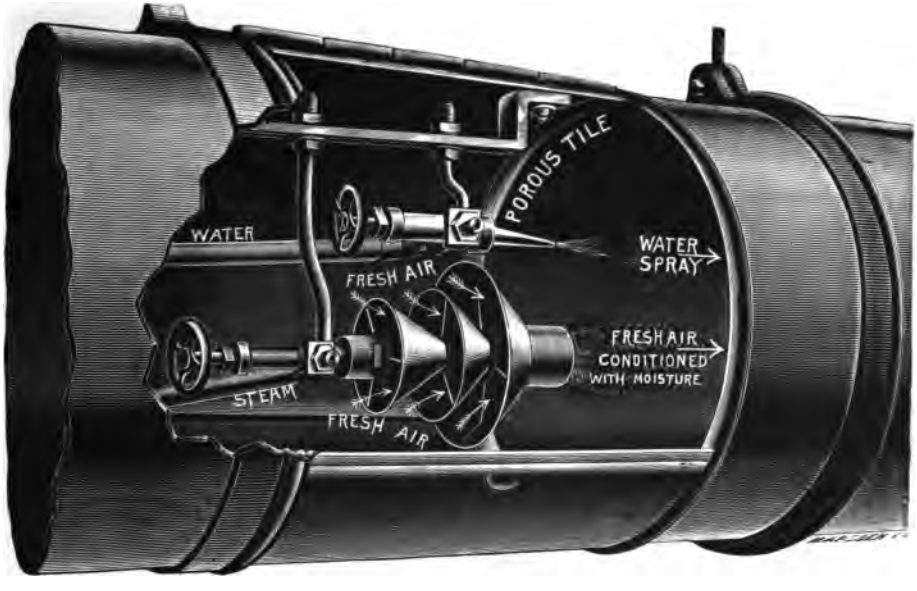

PYE'S HUMIDIFIER.

UNIV. OF MICH.

On the Influence of some chemical agents in producing injury to Iron and Steel.

READ SATURDAY, NOVEMBER 25th, 1893,

BY

MR. WILLIAM THOMSON,

F.R.S.ED., F.I.C., &c.

On being asked to give a paper before your Association, I considered as a chemist that a subject which would be of most interest to you is the study of the effects of different chemical substances on the material which forms the ground-work of most of the structures and appliances which have called into existence the Engineer.

Malleable iron and iron in combination with a small quantity of carbon (which you recognise by the name of steel) has the most valuable properties of all the metals from its tenacity, strength, and easy manipulation, and it is thus the most useful for nearly all purposes of construction; and especially for the manufacture of boilers, furnaces, engines, gearing, bridges, etc. Like almost everything else in this world, however, which possesses such wonderful virtues it is not without its vices, and the most important of these is its love for the gaseous element oxygen, which occurs in mechanical mixture with Nitrogen in the air which we breathe, and in chemical combination with Hydrogen in the form of water.

Iron and steel, in almost all the work with which the engineer has to deal, comes in contact with either one or other, but generally with both of these all-pervading substances, and perhaps the most dangerous position for iron and steel to be placed is, on the air and water line, when the metal is alternately exposed to the one and to the other.

Iron is hardly ever found in the earth in the pure metallic state, and is always obtained for practical purposes in combination

with one of the non-metallic elements, and chiefly with oxygen. The beautiful hæmatite or "Kidney Iron ores" pieces of which are so much prized as Mantel-Shelf ornaments, and the Spanish Iron ores, are oxides of Iron. It is still further combined with carbonic acid to form the black-band and clay-band ironstones found in such large quantities in Scotland.

We get metallic iron from the heavens, for it is often found in the metallic state in meteors which have fallen on to our earth at such comparatively low velocities that they are not shattered into powder or fused and volatilised by the intense heat produced when a meteor strikes the fringe of our atmosphere at the higher velocities. The energy of motion is thus converted into molecular energy or heat, by meeting with the enormous resistance which even an exceedingly rarefied atmosphere offers to these rapidly moving bodies, the velocity of which is as much greater than that of a cannon shot, as the latter is greater than the leisurely amble of a snail.

When some meteors, which fall intact, are cut across and polished, the small and large grains or granules of metallic iron in the stones may be seen bearing as fine a polish as a steel knife, this iron, however, is usually mixed with another metal called Nickel.

Metallic iron is always prepared from the Oxide ores; by various devices man wrests from it the oxygen which it contains in its native condition but the metal never forgets its old friend Oxygen and returns to and combines with it whenever it has a chance. If you take a piece of polished iron and moisten it with ordinary water, you will observe that whilst you look at it the bright surface becomes tarnished by combining with the oxygen present in the air and in the water, and in forming a fine film over its surface of the dull coloured oxide. This being the case it is easy to understand that if metallic iron could be obtained in an extremely fine state of division, as a powder, the particles of which are as fine as the finest flour, and sprinkled in the air, that the action of the oxygen on these fine particles would be very rapid. Here is a glass tube in which I have some metallic iron in such a fine powder; I break the tube and shake the powdered iron into the atmosphere, and there you observe that the affinity of the oxygen of the air for the iron is so strong that the latter

takes fire and falls as a shower of sparks, leaving the red oxide where it falls.

In studying the action of water and air on Iron and Steel we must consider many other conditions of both in the way of impurities which may materially affect the results.

If you take a piece of chemically pure iron and place it in some chemically pure water it will not become oxidised or rusted. When iron combines with oxygen as much energy in the form of electricity and heat is liberated as was required to be expended in tearing the two apart in the process of smelting. For rusting to take place it is necessary to have another substance which is electronegative to the iron, to be in contact with it, so that the current of electricity liberated by the oxidation of the iron passes away to the metal, or other material which acts as the electronegative element. In this way the iron acts as one of the elements of a Voltaic cell. Here I have a plate of iron and a plate of copper, joined together over the top by a copper wire, the plates standing half immersed in a solution of the chlorides of sodium and magnesium (a solution made to imitate as nearly as possible sea water). In this couple the iron is electropositive to the copper, a current of so-called positive electricity flowing from the copper plate through the wire to the iron plate, and through the salt solution to the copper plate again, and thus the "circuit" is what is called closed, and the iron becomes comparatively rapidly oxidised or rusted.

On the other hand, if iron be similarly placed in Voltaic communication with a plate of metal which is electropositive to the iron, the latter then becomes electronegative, and remains comparatively unaffected. Here, for instance, is a couple composed of a plate of iron joined to a plate of zinc, by a wire similar to the previous experiment; in this arrangement the zinc becomes oxidised, and the iron remains comparatively unacted upon. If you look at the two vessels I show, you will notice that the salt water in which the iron plate is connected with the copper is quite red with rust, whilst if you notice the water in the other, in which the iron is connected with the zinc, you will observe that it is comparatively free from rust, but it contains a floceulent white precipitate of the oxide of zinc, indicating that the latter has oxidised, and at the same time almost prevented the iron from oxidising.

This system of preserving iron from corrosion in steam boilers has been patented by Hannay, who suspends a ball of zinc in the water of the boiler and attaches to it wires, the other ends of which are fixed in metallic contact with different parts of the shell; by this means, he claims that he not only preserves the iron from corrosion, but aids materially in the prevention of incrustation, because as the zinc oxidises, hydrogen is evolved on the surface of the iron in small quantities, and this aids in preventing the sulphate and carbonates of lime and magnesia thrown down from the water from adhering to the plates as a hard scale.

In some boilers large pieces of zinc are placed in contact with the iron for the same purpose. On the contrary, if pieces of copper be left in contact with the iron plates the latter would become rapidly oxidised or corroded. If you examine a piece of iron which has become corroded by oxidation, you will observe that the corrosion has taken place in small holes or pits, and this is technically known as "pitting"; these are produced by some impurity existing in the iron, which ultimately forms, under favourable conditions, the centre of the pit; this may be a piece of carbon, a minute portion or speck of manganese, or other substance, which is electro-negative to the iron, which latter being electro-positive becomes oxidised. It is curious that when rust begins to form on iron it usually attacks it at certain minute points and extends, like spots of mould, the oxide of iron itself acting as an electro-negative element to the iron upon which it rests, so that when once a piece of iron has become rusty it is very difficult, after cleaning, to prevent it from again becoming rusty, unless every particle of rust be most carefully removed from it, each particle forming an electro-negative element around and under which the electro-positive iron begins to oxidise and produce a small hole or pit.

This leads me on to an important question which has presented itself lately to boiler makers, as to whether it is safe to rivet steel plates to iron plates in steam boilers or to use steel rivets for iron plates or iron rivets for steel plates; here is an instance in point. I show you a portion of an arc of a boiler furnace flue made of steel, riveted together by rivets made of ordinary Low Moor iron, and you will observe that the steel in

the vicinity of the rivets is rusted or badly pitted whilst the rivets themselves remain intact; such a result leads one to ask the question, whether the iron of the rivet acts as an electro-negative element to the steel of the boiler plate. I made a number of tests to determine how iron stands to steel and how different samples of steel stand to each other in this respect, which may be accomplished by a very simple appliance.

A Thomson's tangent galvanometer is taken, which is practically a small mirror with three or more magnets, attached to the back and suspended by a silk fibre in a small tube surrounded by a coil of wire; a beam of light is thrown on to the mirror, which being reflected shows a spot of light upon a scale. The mirror is brought to a neutral point and steadied by a control magnet fixed some distance off; this forms a most delicate test for the faintest current of electricity, because such a current tends to turn the magnets and consequently the mirror to which they are attached at right angles to the current. The slightest movement in this direction moves the spot of light through several degrees on the scale, as may be observed by throwing the light reflected by a small hand mirror on to a wall some distance off, the faintest movement of the mirror shows a large movement of the spot of light on the wall.

The ends of the coil of wire which surround the mirror are attached to brass screws or terminals, to which the wires coming from any elements which it is desired to test may be attached. If we take a piece of copper and a piece of zinc, and attach one end of a wire to each, the other end being attached to one of the terminals, and then immerse them in water, salt water or weak acid, a current of electricity is produced which flows from the copper through the wire connected with it to one of the terminals of the galvanometer; thence through the coil of wire surrounding the magnets and the mirror, and on to the terminal on the other side, and from this on to the zinc, and from the zinc through the liquid on to the copper, thus closing the circuit and the spot of light swings from left to right. If, however, the metals be reversed, and the copper attached to the wire to which the zinc was attached, and the zinc to the one to which the copper was fixed and again immerse both in

the liquid, the current is reversed and the spot of light swings round from right to left. By this means it is easy to find when two substances are attached to these wires and placed in a liquid, first, whether any current of electricity is produced at all, secondly, in what direction the current is moving, if any exists, and thirdly, what strength of current is produced. By observing first, whether the spot of light moves at all, secondly, if it moves, to which side it swings, and thirdly, how quickly and to what distance from the central point the spot goes, we can determine which body is electronegative to the other. In other words, which is electronegative like the copper and is thus not acted upon, and which is electropositive like the zinc which is oxidised or dissolved by the fluid.

I had a small briquette cut from the iron rivet above-mentioned and a similar one cut from the steel plate, both of which I attached to the wires of the galvanometer, as above described, and placed them in a vessel containing some weak sulphuric acid. At first the spot of light swung from right to left, showing that the steel at first was electronegative to the iron, but in a few moments more the spot gradually swung round from left to right and remained in that position, indicating that afterwards the iron was electronegative to the steel.

When put into a solution of chloride of ammonium the iron was very strongly electropositive at first, afterwards becoming weakly electronegative.

When put into Caustic Potash solution the steel was at first strongly electropositive, but the current gradually became weaker and weaker, till it practically ceased, no effect whatever being produced on the spot of light.

I obtained three other pieces of steel cut to the same size, $\frac{5}{16}$ths. of an inch square $\times$ $\frac{13}{16}$ths. of an inch long, through the top of each was drilled a hole for the wire, and they were all marked in alphabetical order from A to E:

A. Was the piece above-mentioned, cut from a *rivet* of *Low Moor Iron*, taken from corroded steel bowling hoop of furnace.

B. Cut from the steel bowling hoop itself from which A was taken.

C. New steel rivet.

D. Steel rivet closed by machine and held in the dies till nearly cold.

E. Piece of mild steel plate (new—unworked).

The following table shows the behaviour of all these samples placed in electrical communication with each other in the three fluids mentioned above; viz., Sulphuric Acid (one part to nine of water), Caustic Potash Solution (specific gravity 1·311), and Chloride of Ammonium Solution (specific gravity 1·033).

The results obtained from the experiments show that the three samples of new steel, C, D and E, all react strongly amongst themselves, and when in electrical contact with iron.

In a weak solution of Chloride of Ammonium, which may be taken to represent electrically the ordinary concentrated water contained in steam boilers, the iron when first introduced in Voltaic contact with steel was strongly electropositive, being presumably strongly acted upon by the solution, but after a few minutes that action ceased, or almost ceased, or became reversed, and so far as these tests go it may be taken as a whole, that it is quite as safe to bring steel and iron into close contact with each other, as two different kinds of steel.

Some most interesting and exhaustive experiments have been made by Mr. Thomas Andrews, F.R.S. Ed. Assoc., M. Inst. C.E., on the galvanic action which takes place between iron and steel, and between iron of different kinds and steel of different kinds, one entitled "On Galvanic Action between Wrought Iron, Cast Metals, and various Steels during long exposure in sea water," read before the Institute of Civil Engineers, vol. lxxvii., session 1883-84, part iii.; the second on "Corrosion of Metals during long exposure in sea water," read before the Institute of Civil Engineers, vol. lxxxii., session 1884-85, part iv.; and the third on "The relative Electro-Chemical positions of Wrougt Iron, Steel, Cast Metal, etc., in sea water and other solutions," read before the Royal Society of Edinburgh, are well worthy of perusal.

Mr. Andrews shows that whilst some varieties of iron and steel remain constantly electro-positive or electro-negative to each other, others change, taking opposite positions towards each other, whilst others again change positions constantly during long periods.

	Sulphuric Acid. (Acid 1 part to Water 9 parts.)	Caustic Potash Solution. Specific Gravity 1·311.	Chloride of Ammonium Solution. Specific Gravity at 1.083
A & B	+A at first, +B afterwards	+B at first, the current rapidly going going down to zero	+A very strongly, on continued action +B very weak, almost nil
A & C	+A " +C "	+C very strongly	+A very strongly, afterwards the current decreased to zero, but no reversal
A & D	+A " +D "	+D "	+A at first weakly, afterwards + D weakly
A & E	+E	+E "	+A strongly at first gradually becoming very weak but showed no reversal.
B & C	+C	+C at first fairly strongly, then +B fairly strongly	+C strong at first afterwards very weak
B & D	+B slightly, +D afterwards	+B at first fairly strong, then reversing to +D, reversing again to +B rather strongly	+B strong at first afterwards +D weakly
B & E	+B momentarily, then +E afterwards	+B momentarily, then +E very weakly	+B strong at first, afterwards weak, but no reversal
C & D	+C " " +D "	+C very strongly	+C " " " "
C & E	+C strongly at first, afterwards becoming extremely weak	+E fairly strongly	+E " " " "
D & E	Sometimes on one side and sometimes on the other	+E very strongly	+D " " " "

Copper, with all the samples, was "+" (electropositive) in Caustic Potash Solution, and "—" (electronegative) in Sulphuric Acid and Chloride of Ammonium Solutions.

The + sign corresponds to the electropositive, *i.e.*, the zinc element which becomes corroded, whilst the — sign corresponds to the Copper element which in Acid Solutions does not corrode.

Another paper by Mr. David Phillips, read before the Institute of Marine Enginees, May 13th, 1890, is also well worthy of perusal, in which he shows that steel corrodes much more easily than iron.

One can easily understand that whilst there is no material Voltaic action between two pieces of steel or of two pieces of iron, or of pieces of iron and steel, there may be conditions on the surface of one plate or rivet which may act strongly as an electro-negative element, and produce rusting on the metal in contact with it. Here for instance is an example: If you take a piece of iron and put it in weak Nitric Acid it begins to dissolve; if you take a similar piece of iron and place it in strong Nitric Acid, touching it at the same time with a piece of platinum wire, and then put it into weak Nitric Acid, it will not dissolve, it having been rendered passive; and similarly there is reason why one piece of the iron may act electronegatively towards another piece of the same metal, on account of some slight alteration of its physical properties, by hammering, or by its having attached to it some peculiar oxide of iron (for there is a large number of different kinds of iron oxide), which may act electronegatively towards metal with which it is in contact, and which may thus induce oxidation in such metal.

When iron is placed in acid some of it is dissolved and Hydrogen liberated; this gas is supposed to be of the nature of a metal, and as such it combines with and forms an alloy with the iron which becomes quite brittle till the iron is heated and the hydrogen liberated when it regains its tenacity. If a piece of wire be broken when it has thus become alloyed with hydrogen and the end wetted bubbles of gas may be seen passing rapidly through the drop of water. This condition of things was observed and investigated by Mr. W. Johnson, B.Sc., of Manchester, and afterwards by Professor Osborne Reynolds, F.R.S. The latter showed that if an iron tube be closed at one end and filled with oil and placed in an acid solution, hydrogen is liberated from the outside which passes through the wall of the tube, displacing the oil so that the gas might thus easily be collected from the inside of the tube. There is a possibility therefore, that where iron is rusting, that the hydrogen liberated may similarly combine with the iron and

render it brittle, or reduce its strength, and this is a question of much importance to Engineers.

Salt water has a much greater action on iron than fresh, and consequently marine boilers have a shorter lifetime than those on land. Salt water however has a still greater action on iron where the water is mixed with air, and still more so when it is mixed with air and carbonic acid, which always occurs in greater or less quantity in the atmosphere.

My late partner, Dr. Frederick Grace-Calvert, F.R.S., pointed out many years ago that when bright iron was placed in an atmosphere of dry oxygen or of dry carbonic acid it did not rust, when put into a damp atmosphere of oxygen it rusted slightly; in a damp atmosphere of carbonic acid a small quantity of the white carbonate of iron was formed on the surface of the bright metal, but no rusting took place; when however bright iron was placed in a damp mixture of the two gases (oxygen and carbonic acid), it became rapidly oxidised, forming a copious excrescence of red oxide, or rust all over it.

These experiments led him to make others in an opposite direction, with a view of preventing rusting. He placed bright iron in a solution of Caustic Soda, which would combine with Carbonic acid, and found it to remain bright, and he then ascertained that a solution of ordinary Carbonate of Soda (washing soda) had the same effect. This simple method may be used for preserving steel needles or instruments from rusting where they are liable to be exposed to a damp atmosphere. I had in my possession till quite recently pieces of bright polished iron from these experiments, which were made over a quarter of a century ago, showing the iron in a perfectly bright and untarnished condition immersed in the liquid.

It will thus be seen that Carbonate of Soda which is often used to prevent the formation of hard incrustation in boilers also acts in preventing the oxidation which is liable to take place, especially when the boiler is fed directly by an injector, the air which is dissolved in the cold water acting especially rapidly on the plate against which it is thrown.

The iron of boilers is often corroded and extensive "pitting" produced by free Sulphuric Acid which is contained in some waters,

often from supplies pumped from coal mines which contain iron pyrites (Sulphide of Iron). The Sulphur in presence of water and air is converted into Sulphuric Acid, part of which remains free, and part combines with the iron of the pyrites, forming Sulphate of Iron.

Free Hydrochloric or free Sulphuric Acids are occasionlly found in other sources of water supply such as in canals, and it is very important that the water in boilers should contain no trace of free acid, otherwise it soon finds specks of impurities, such as carbon or Manganese in the iron or steel plates, which act the part of the electronegative element, and round which the iron is rapidly attacked and dissolved, "pitting" being thus produced.

The presence of free acid in the concentrated water is easily detected by putting a drop of it on to a piece of blue litmus paper, when the colour of the litmus becomes altered to red, but as a rule this is not a sufficiently delicate test to apply to the original water, which must be concentrated to possibly a one hundredth part of its volume in a glass vessel before the free acid can be thus detected.

A very good plan which has already been applied to shew when the waters in boilers contain free acid is to take an ounce of a substance called Phenol-phthalein, dissolve it in the smallest quantity of Methylated Spirit (say half a pint), and then pour it into the boiler, or allow it to be sucked up by the injector. So long as the water is safe it will possess a light blood red colour as shown in the water gauge, and when this disappears a solution of Soda Ash should be passed into it till the blood red colour is restored. Thus the fireman in charge of the boiler is enabled to see, at a glance, whether the water contains any trace of free acid at any time, or in other words, to see when Soda Ash which has been added becomes entirely decomposed, by either the free Acid or the Salts contained in the water.

Caustic Soda and Soda Ash containing Sulphide of Sodium are sometimes employed for the prevention of incrustation and for neutralizing any free acid which might be present. This impurity should be avoided and this is best done by employing only the Soda Ash made by the Ammonia process, such as that

supplied by Messrs. Brunner, Mond & Co., or Messrs. Bowman, Thompson & Co.

Waters employed for steam raising purposes sometimes contain Nitrates and Nitrites in large quantities, and these even in presence of Carbonate of Soda, are liable to attack the iron or steel of the boilers and produce pitting. If sufficient hard scale forms on the surface of the plates, that will, of course, preserve the iron from corrosion, but it must be remembered that a very small amount of hard scale on the boiler plates occasions the loss of a very large percentage of the heat from the burning coal, and it must therefore be the constant aim of every engineer to have the plates of his boiler as free as possible from it.

To counteract this evil, some pieces of zinc may be placed in the boiler; these decompose the Nitrates and Nitrites combining with the oxygen and forming oxide of zinc and converting the nitrogen into ammonia. The presence of the mixture of 1 part by weight of Bisulphite of Soda to 2 parts of Soda Ash, also aids in preventing the action of these compounds on the iron, and the presence of Tannate of Soda also tends to prevent this action.

Mr. Lavington E. Fletcher of the Steam Users' Association of Manchester, called my attention to a very curious injury to some steel boilers, but as he will, I understand, publish the details of this remarkable damage, I will simply deal with it from a chemical point of view. Several steel boilers had been employed for the concentration of solutions of Caustic Soda from 5 per cent. to 12 per cent., and after working for about two years the plates became cracked along the line of the rivets in all four boilers. Mr. Fletcher suggested that he thought this might be due to occluded hydrogen in the iron; for my part, I could not see how hydrogen could be produced from Caustic-Soda and Iron, but determined to make some experiments to find whether Caustic-Soda had any effect at all on iron. Mr. John Thewlis Johnson, of Messrs. Richard Johnson & Nephew, was kind enough to give me some puddled iron and also steel wire, which I divided into pieces of 18 inches in length.

A. 4 pieces of puddled iron and 4 pieces of steel wire were put into a 5 per cent. solution of Caustic Soda in an iron tube and closed by a screw top.

B. 4 pieces of each wire were similarly placed in a 12 per cent. solution of Caustic Soda.

C. 2 pieces of each wire were placed in water in an iron tube similarly arranged.

These pieces were put into these solutions on the 28th of February last and taken out on the 11th of September last, having thus been in the solutions for about 6½ months (195 days) during this time they were heated to the boiling point of water during a total number of 84 days night and day.

A corresponding series of experiments was made by leaving 2 pieces of wire in water and 4 pieces in 5 % and 12 % Caustic Soda solutions respectively *in the cold*, during the same time: after this the breaking strains of two of the pieces in each of the Caustic Soda experiments and one in each of the water experiments were determined, and the number of twists required to break the others were determined by Mr. John Thewlis Johnson in each experiment, the breaking strain and twists required by the original wire being also taken on the 28th of February. The table on following page shows the results of these tests.

These experiments do not give very satisfactory results, but such as they are, they rather indicate that Caustic Soda has little effect on the breaking strain of steel wire in the cold and a little effect when heated, whilst cold water has little effect and hot water a very considerable effect in lowering the breaking strain.

On the puddled iron wire the cold Caustic Soda solutions had a considerable effect in *increasing* the breaking strain. Hot caustic solution no effect at all. The power of withstanding twisting without breaking, was much reduced in all the Caustic Soda solutions.

These results do not prove by any means conclusively that the damage to the boilers above-mentioned by Caustic Soda Solution was a chemical action at all. I trust when Mr. Fletcher publishes his results he will be able to point out the cause, which is probably a mechanical one, possibly by the mechanical action of the soda in getting between the riveted portions of the plates by capillary attraction, and there drying or crystallizing and expanding, although it is difficult to see how this could account for it.

The ordinary red rust which occurs on iron has the chemical composition of $Fe_2 O_3$, that is, two atoms of iron united with

Effects of Caustic Soda on the Strength of Iron and Steel Wire of about ⅛ inch thick.

			Before Treatment	SOLUTIONS					
				COLD			HOT		
				Water	5 % Caustic Soda	12 % Caustic Soda	Water	5 % Caustic Soda	12 % Caustic Soda
Steel Wire	Breaking Strain, in lbs.	1st piece 2nd piece	2085	2050	2132 2010	2121 1960	1665	2095 2030	1980 2020
		Averages	2085	2050	2071	2090	1665	2062	2000
	No. of Twists in 6 ins.	1st piece 2nd piece	13	10	14 13	12 8	2	12 12	12 13
			13	10	13·5	10	2	12	12½
Puddled Iron Wire	Breaking Strain, in lbs.	1st piece 2nd piece	1074	1135	1115 1116	1110 1110	1062	1098 1105	1085 1062
		Averages..	1074	1135	1115½	1110	1062	1101	1073
	No. of Twists in 6 ins.	1st piece 2nd piece	12	12	11 9	8 4	10	7 7	9 8
			12	12	10	6	10	7	8½

three of oxygen. The oxide of iron found adhering to the plates of boilers under water is usually black, and contains less oxygen, viz., $Fe_3 O_4$, in which three atoms of iron are united with four of oxygen. This black or magnetic oxide of iron is also produced on iron when it is placed underground in contact with wet cinders or sand. When this compound is once formed it cannot easily be converted into the red oxide by the action of water and air, and Professor Barff took advantage of this in coating iron with a thin layer of black oxide, which protected the iron from further oxidation, this being accomplished by putting the iron to be coated into a retort or chamber heated to redness and then passing steam over it; the red-hot iron decomposes the steam, uniting with its oxygen and forming a coating of the magnetic oxide $Fe_3 O_4$ over it, and liberating hydrogen. This process has however not been a great success, because if the black oxide got chipped off, the iron rusted in the ordinary way, producing red oxide very rapidly, as the coating of black oxide then acted as the electronegative element to the metallic iron, converting the exposed parts rapidly into the red oxide.

I now come to the second part of my subject, viz., the effects of different paints and varnishes in preserving iron from rusting. The great danger to iron work exposed to the air and moisture is the production of rust, which is composed chiefly of the red oxide, combined with a small quantity of the black oxide. Iron structures must therefore be preserved by coating them with paint, or some varnish which prevents the oxygen, and carbonic acid, and moisture of the air from coming in contact with it. Much discussion has taken place as to the best varnish or paint for doing this, and I propose to give the results of some experiments which I have recently carried out in connection with the rusting of iron, under the action of salt water and air, which affects iron more rapidly than ordinary water.

I tested in this way the influence of white lead, zinc-white and iron oxide paints, and of varnishes composed of bitumen alone, and mixed with lime, coal tar, and other substances. After many trials I found the best way of testing the effects of these preservative varnishes was to weigh the slips of iron or steel, $1\frac{3}{4}$in. × 4in. × $\frac{1}{32}$in., then coat with the varnish and weigh again before and after drying, this gave the quantity of

the wet and dry paint respectively per square yard of surface covered. When dry, each slip of iron was placed in a glass beaker, half filled with a clear solution of a mixture of the chlorides of Sodium and Magnesium, of about the same strength as sea water, this solution rapidly oxidises iron placed in it. The variously coated slips of iron above mentioned were placed in these solutions and left for some days, the liquid being examined each day. I found that after a few days the liquid in which the strips coated with the paints and varnishes above mentioned were placed became turbid, and after some days more precipitates of the red oxide of iron or rust gradually settled to the bottoms of the glass vessels. There was however one paint which did not render the water in the slightest degree turbid, even after all the other paints had thrown down a copious deposit of rust, and that was red lead. This was a remarkable result, because red lead is a highly oxidising body, and one would expect that instead of preserving iron it would lead to its more rapid oxidation.

I was working at these experiments with Mr. Harry Smith, F.I.C., and it occurred to one of us that the reason for this oxidising agent preserving iron so well was that the oxidation of some of the protoxide of iron which was first formed on the surface of the metal, which is soluble in water, was further oxidised by the oxygen in the red lead and converted into the black oxide of Iron. In other words, that the effect of the red lead on iron was to produce a skin of the unoxidisable and protective black or magnetic oxide on the iron itself under the paint, or that painting the iron with powerful oxidising agents produced the same substance as that which was formed by Professor Barff's process.

It was but another step to look round for some other chemical substance which possessed powerful oxidising action to find whether that would also act in a similar, or if possible, more efficient manner, than red lead; amongst the highly oxidising agents we tried we found one from which we formed a paint which does not become solid like red lead on standing for some time. It makes a paint of a good body and produces a protective coating apparently superior to red lead; the salt water in which the iron so painted was placed,

remained quite clear after all the ordinary paints had produced copious red deposits of red oxide in the solutions. To still further follow up this theory, we removed carefully the coating of paint from the strip of iron and replaced it in the salt water, and to our astonishment we found that the iron did not rust to any appreciable extent afterwards. We have extended these experiments to other oxidising agents, and we find that a number of these bodies produce a protective coating of the black oxide of iron on the surface of the metal. I may mention that as this discovery appears to be of so much industrial importance, I suggested to Mr. Smith that he should patent the use of these chemical substances for the prevention of oxidation, and this he has done.

Some time ago I made a large number of experiments, for a Company, to determine which paint was most suitable for protecting a large iron structure from the action of the sea water spray, and rain. Having arrived at the conclusion that red lead was the best, the directors being practical and business men, asked an eminent engineer what he had used for painting a large iron structure which he had just completed. He told them he had used oxide of iron paint, and these practical men decided that they would use the same, although my experiments showed that the iron rusted comparatively rapidly under the oxide of iron paint producing hydrogen which caused the paint to blister.

I find on speaking to architects here that it is their custom to order iron work to be painted with red lead paint. I understand that the Dutch Railway Company and the Cincinnati Southern Railway Company use only red lead for the protection of their iron work, and from the experiments which I show you here to-night you see that they have acted on sound scientific principles.

DISCUSSION.

Mr. Thomas Settle remarked that a friend of his had practically tested the Barff process of protecting iron, and reported that it was a complete failure. He recalled to mind sometime ago seeing a gentleman use small pieces of cast steel in which small holes had to be drilled. To soften the steel he had a piece of iron tube which was filled with cast-iron borings. The steel was then put in and the whole heated in the fire with the result that the steel became exceedingly soft. Could the Author explain the reason for the process?

Mr. Alfred Saxon, in a few words, alluded to the great work which the chemist had done and was doing for the iron industries, and pointed out the advantage of a knowledge of chemistry to the engineer.

Mr. Alex. Gem said he had frequently seen pitting underneath the scale in the boiler, its presence being shown by a speck of rust in the scale. On taking the scale off serious pitting was found. This was hardly in accordance with the Author's remarks on pitting.

Mr. J. Corbett asked if the Author could tell them when with the aid of sewage works and filter beds they succeeded in transforming the raw organic matters now in the sewage into the nitrites and nitrates and producing a pure water, would the Irwell be better or worse as a feed water for boilers?

Mr. Thomas Settle observed that a locomotive going over a girder bridge would probably drop cinders, and would these cinders cause pitting of the plates, and if so, why?

Mr. W. H. Beastow said that he had taken a great many small pieces of wire, say about ¼in. long and case-hardened, and then rattled them in a wooden box. They did not come together till completely brightened, and then they became one mass of wire. Was this electro-positive?

Mr. Carter Beeley said it was well known that if magnesia was present in the water and any soapy oils got in, the mixture

of the two formed a floury dust, which proved in practice more dangerous in tending to overheating of the plates than very thick ordinary scale. He should like to know if the Author could state what was the particular substance thus formed which became so great a nonconductor of heat.

Mr. JAMES FLETCHER said he knew of two boilers, one working at 40 lbs. pressure and the other at between 180 lbs. and 230 lbs. In the first there had been an accumulation of scale for fifteen years, but no pitting; but in the high pressure boiler, fed by the same water, the pitting in twelve months was simply astonishing. In view of these facts, he wondered if high pressure had any effect in causing pitting.

Mr. THOMAS ASHBURY said he remembered recently paying a visit to a bridge built on the box girder system and which was condemned. When the manhole was taken away and the girder examined inside it was found to be so corroded that he could push the point of his umbrella through the plates.

There was no doubt that the application of boiled oil to iron before painting and the latter done afterwards, was very effective in preventing corrosion. And few of them were unaware of the fact that painting again and again had failed to prevent corrosion taking place underneath it.

He should like to know if the exclusion or attempted exclusion of the atmosphere had anything to do with the increase of rust? Probably if the paint described by the author could be applied before the material had time to oxidise, it might tend to minimise the evils resulting from rust.

The deterioration of boiler plates was an important subject, and the light thrown on it by the author would be of great value.

He had great pleasure in moving that the best thanks of the members be accorded to Mr. Thomson for his interesting address.

Mr. T. SETTLE seconded the motion, which was carried with acclamation.

The CHAIRMAN (Mr. John West, past-President) referred to the importance of chemistry and engineering, and cited the case of the defects in a steam boiler, the cause of which he had only

been able to find out, on submitting the water to the examination and analysis of Sir H. Roscoe. As regards the corrosion of iron he fully supported the statement made in the paper that red lead was the best paint for preventing it.

Mr. S. Boswell, who was prevented by indisposition from attending, subsequently wrote regretting his enforced absence, as the paper had special interest for him; and bristled with questions which were very debatable, and in which Mr. Thomson's opinions would have been very valuable. Such gentlemen as Mr. Thomson in their scientific researches had done much to assist engineers, but the theory of electric and magnetic influences might, he felt sure, be cast aside. To say electric currents did not exist and had not an influence would be idle talk; they were present, and were influential, but in his opinion they were so slight, that it was only by the aid of the most delicate instruments that their presence was discovered, and often of a contrary character to that expected. He had been closely associated with the steam boiler business for over twenty years and had investigated thousands of cases of internal corrosion, and he had come to the conclusion that electric and magnetic influence played no material part in the general wear and tear of a boiler. During the same period he had carefully noted the action of various "Electrogens," but did not know of a single case where permanent benefit had been derived and the device kept in use. The great trouble in a steam boiler was the corrosion due to impurities, acids, free oxygen, &c., often found in the feed water originally, but very frequently introduced ignorantly by the user. Refuse from engine cylinder, steaming coils, excessive quantity of air drawn in by injector all tended to give a corrosive agent. Many engineers using tallow would insist on its being white, forgetting that to make it white a strong acid had to be used, which in turn would be carried to his boiler to carry out its mission of destruction.

Corrosion was very eratic and capricious, frequently following contrary laws, sometimes only seen on the hottest plates such as furnace sides, while in others it was only seen on the quiet and cold parts, and in very many cases litmus papers were useless in trying to detect acidity which was well known to exist.

He would have liked Mr. Thomson's opinion on the condensation of sulphurous fumes and vapour from the burning fuel when they were reduced in temperature, as he had had some serious cases with low pressure and hotwater circulators.

With regard to the peculiar defects mentioned to Mr. Thomson by Mr. Fletcher, Mr. Boswell had a very special knowledge of the case, having watched it carefully for months. There were nine boilers in all working at 80 lbs. pressure with liqour introduced at 5 per cent., but at what it was drawn off appeared (to Mr. Boswell at least) uncertain, often under 10 per cent. Could the defects be due to bad material? No, some of the boilers had worked years without trouble, others were near new. Could it be due to the first nip in bending plates? No! fractures were found in ring seams where there had been no "first nip." Other chemists had used boilers on similar lines, but at very low pressures, experiencing leakage only, but as these boilers were laid off one by one rivet heads would drop off by the dozen, and rips were found near the seams; but here came the difficulty, while the rips were at the seams, not one ran from hole to hole, which certainly would have been the case if due to a mechanical action. The fracture took an irregular line, passing within $\frac{1}{8}$ in. of rivet holes, but yet never through them. A tensil strain would have ripped the seam through the rivet holes where the least sectional area was to be found, but in this case the arear of the fracture was greater than a straight line through the rolled plate. Large quantities of caustic were always found in flue, and Mr. Boswell had clung tenaciously to a theory of crystalization between the plates when cooling down, but even this had to be discarded when similar rips were discovered at the boiler crowns above water line. The sketch (Plate 1) would show the peculiar fractures alluded to. In his opinion it was a mechanical action chemically influenced.

After very extensive repairs boilers were put to work in the liquor process as before but only at 5 lbs. pressure, where seemed to come in the whole secret, namely temperature and pressure.

In reply, Mr. Thomson said with regard to Mr. Settle's suggestions there was no doubt that if the magnetic oxide of

iron, which constituted the Barff coating, became chipped or rubbed off, the iron underneath would rust and corrode, and would do so probably quicker than if the iron had not been treated. He could not understand how the heating with cast iron borings should have the effect of softening hard steel. If it had been heated to redness with powdered oxide of iron, or Hæmatite iron ore, that would certainly have the effect of removing most of the carbon from the steel, and rendering it "soft."

In reply to Mr. Gem, Mr. Thomson understood that as a rule, even with bad waters, the iron became protected when a scale formed on the surface of the iron plates. It was possible, however, to imagine that if corrosion had taken place previous to the formation of the scale, that it might continue after the scale was deposited upon it.

In reply to Mr. J. Corbett, there could be no doubt that if the nitrogenous organic matter of the sewage were transformed into Nitrates and Nitrites, the value of the water for steam producing purposes would be much deteriorated. Sewage in the water was an advantage, because it absorbs most of the free oxygen which was likely to be present, besides aiding in preventing the formation of a hard scale or incrustation, but the presence of Nitrates and Nitrites will also tend to produce corrosion and pitting of the boilers, even in the presence of soda ash.

With regard to Mr. Settle's second question he considered that if half burned coal or cinders were allowed to fall upon the iron of a girder bridge they would be liable to produce corrosion of the iron, by reason, first, of the fact that they would retain rain water in contact with the iron for a long time, which otherwise would flow away and become evaporated, and second, that such cinders would form a good electronegative element, which would tend to increase oxidation and corrosion of the iron on which it remained in contact.

He could not quite understand Mr. Beastow's question; if the steel he mentioned were specially hard it would be liable to become magnetised by the magnetism of the earth, and by rubbing against each other; this magnetism might possibly be

increased to such an extent that the pieces might remain adhering to each other. He could not give any other explanation of the phenomenon which Mr. Beastow had observed.

Mr. Beeley referred to the presence of magnesia in the water as tending to produce overheating of the plates. It was true that magnesia was precipitated from solutions in the form of Carbonate, but to a still larger extent as the oxide or magnesia. This being light remained in suspension in the water to a large extent when the boilers worked vigorously, and tended to settle down on the flues and form a dense coating afterwards, which prevented the free contact of the water with the plates, and to this cause many cases of overheating of the flues was attributed. The presence also of a little oily or greasy matters in presence of the magnesia had a still more pernicious effect in this direction. The lime salts were not so apt to produce overheating, as they were much heavier and did not remain easily in suspension in the water.

With regard to Mr. James Fletcher's question, Mr. Thomson did not think that the difference of pressure had anything to do with the corrosion of the boilers. He assumed that the boilers in which the higher pressure of 180 to 230lbs. was employed were locomotive boilers, which would probably be fitted with copper or brass tubes, and he thought it was more likely that these fittings acted as electronegative elements, making the iron of the boiler electropositive. It is probable that certain waters which under different conditions would be harmless, would under this special condition be injurious to the iron. He might point out that Mr. Fletcher mentions that the lower pressure boilers were covered with scale, whilst it would be more difficult for scale to form on the tubes in the high pressure locomotive boilers.

Mr. Thomas Ashbury mentions the cause of damage to a bridge built on the box girder system; in such a bridge there could be no doubt that if it prevented the plates from becoming wet the system would be a distinct advantage in the way of preventing corrosion, but if, on the other hand, any leakage of water took place into the confined or closed space, such water would have a more detrimental effect upon the iron than if the

whole were left exposed to the air, under which condition it would be likely to dry up, and produce comparatively little injury.

As to the application of boiled oil to iron, he might say that any such coating would have considerable influence in preventing oxidation or corrosion, but he had found by experiment that a coating of boiled oil on iron would not prevent rusting where dampness, or moisture, or water came in contact with it. Generally speaking, paint of any kind had a distinct advantage over boiled oil, by reason of the thicker coating of material which thus could be put upon it. He had observed that after corrosion had commenced on iron it was next to impossible to stop it by merely painting over the corroded parts with ordinary paint. He considered that under these conditions it was better to remove the rust, and possibly the rubbing of the iron with a little powdered zinc might aid considerably in preventing further corrosion.

He was glad to see the remarks by Mr. S. Boswell, especially in reference to the peculiar case to which he had called attention, and which had been investigated by Mr. Lavington E. Fletcher. Mr. Boswell's opinion was that the peculiar effect due to the boiling of caustic soda solutions was due to the pressure under which it was boiled, and he put this down to "Mechanical action chemically influenced." The speaker had made a number of experiments to find whether caustic soda did actually affect iron, but with a negative result, and he could not see any other explanation of the matter than that it was due to some mechanical action possibly produced by the crystallizing of some of the salts between the plates and along the line of junction. It did not follow that because the same action took place in the steam space that this argued against the theory he had suggested, because it was possible that the liquor might boil against the iron or steel which formed the steam space, and that the crystallising might possibly go on to a greater extent than it would do even in the parts touched by the liquid.

It was true that the greater amount of corrosion was produced by some impurities, such as acids, or free oxygen, or nitrates in the water of the steam boilers, and no corrosion would take

place without a liberation of a corresponding quantity of electricity, and if no galvanic action were possible no corrosion could result. Some irons and steels were more liable to corrode than others when placed under similar conditions, by reason of impurities contained in them, which act the parts of the electro-negative element, and it was quite clear that boilers containing much brass or copper work would be affected to a much greater extent by a bad water than one which was not so fitted. The purer the iron, one might take it, the less likely it will be to corrode or oxidise, and steel which contains as part of its composition a certain percentage of carbon is more likely to become corroded or pitted than pure malleable iron. There can be no doubt that zinc properly applied had considerable effect in retarding the destruction of boiler plates. The speaker considered it probable that it was not often efficiently employed.

He agreed with Mr. Boswell that there was no advantage from using specially white tallow for lubricating purposes, but thought that unless great carelessness were shown in its bleaching by acids and chemical agents no corrosive acid should be left in the fats; some of the fat itself however might be decomposed, leaving free fatty acids which would be liable to attack the iron.

Sulphurous acid produced in the burning of coal affected brass or copper tubes to a serious extent, and they were usually destroyed sooner or later by this action, but iron and steel were only slightly affected in this way unless there were some leakage; the water in combination with the sulphurous acid from the burning coal then rapidly attacked the iron.

(For Diagram see over.)

FRACTURED PLATES.

Plate 1.

(REFERRED TO BY MR. BOSWELL, PAGE 265.)

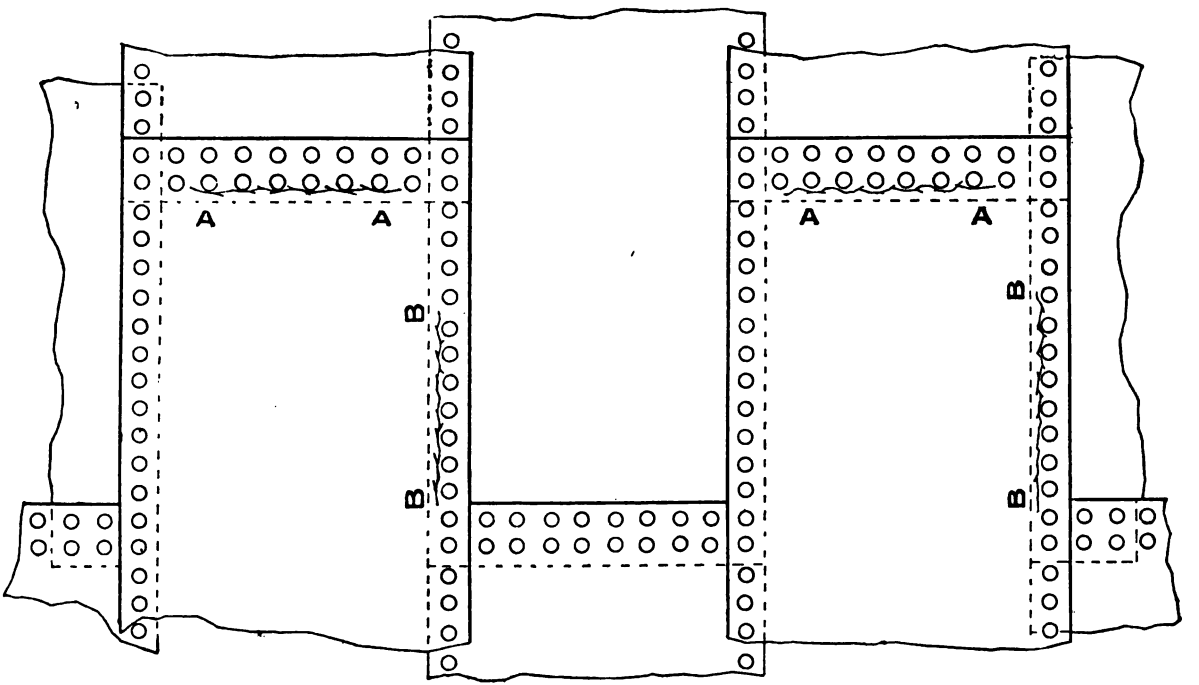

AA. FRACTURES AT LONGITUDINAL SEAMS.
BB. „ „ RING SEAMS.

MANCHESTER ASSOCIATION OF ENGINEERS.

38TH Annual Report

OF THE COUNCIL.

1893.

MANCHESTER:

HERALD & WALKER, TYP., POOL FOLD CHAMBERS, OFF CHAPEL WALKS.

1894.

OFFICERS.

1894.

President:

MR. THOMAS DANIELS, M.I.MECH.E.

Past-President:

MR. G. B. GOODFELLOW, M.I.MECH.E.

Treasurer:

MR. HENRY MAINWARING.

Trustees:

MR. G. CARTER,
" JOHN WEST, M.I.C.E.
MR. JAS. WALTHEW,
" T. ASHBURY C.E.,
MR. ALDERMAN W. H. BAILEY, J.P.

Council:

MR. H. WEBB,
" H. BATES,
" C. FARMER,
MR. J. HARTLEY,
" G. DAVIS,
" A. SAXON.

Librarian:

MR. J. GIBBON,
56, Herbert Street, Cheetham.

Secretary:

MR. FRANK HAZELTON,
63, Barrett Street, Old Trafford, Manchester.

Annual General Meeting

HELD AT THE

GRAND HOTEL, MANCHESTER,

9th December, 1893,

Mr. T. DANIELS, M.Inst.Mech.E., President,

IN THE CHAIR.

The minutes of the previous meetings having been read and confirmed, and signed by the Chairman, he announced to the meeting the result of the ballot for the election of new members.

The election of President and other officers of the Association was next taken, with the result as set forth on opposite page.

Resolved unanimously.—"That the cordial thanks of this meeting be given to Mr. T. Daniels, for the interest he has taken in the welfare of the Association, and the excellent manner in which he has discharged the duties attaching to the office of President during the past year."

Mr. T. Daniels returned thanks.

Proposed addition to Rules re Pecuniary Benefits, by Mr. T. Ashbury.

Mr. T. Ashbury proposed the following resolution, prefacing the same with a few facts and figures in support thereof:—

"That the financial benefits appropriated for the *Ordinary* Members of the Association, as described in and under the existing Rules 13 and 14, shall henceforth only be paid as, and when they may become due and claimed, to all whose names are enrolled on the Register of members as having been duly elected *Ordinary* Members of the Association on or before the 31st day of December, 1893."

Mr. Alfred Saxon seconded the motion.

The proposition was exhaustively discussed; strong opinions being expressed in favour of and against it by a large number of speakers.

It being amply demonstrated to the Chairman that there was considerable diversity of feeling in regard to the proposal, and in view of the fact that it was undesirable that such an important resolution should be passed or rejected by a bare majority either way, but rather that the decision should be practically unanimous, it was decided that the resolution should not then be voted upon.

Subsequently the following resolution was proposed, seconded, and carried unanimously:—

"That the resolution re Pecuniary Benefits on the Agenda, in the name of Mr. Thomas Ashbury, be withdrawn, and that it is hereby referred to the Council for full consideration."

Annual Report of Council,

1893.

The Council have pleasure in presenting the 38th Annual Report of Proceedings.

To the membership roll during the year have been added—

13 Honorary Annual Members.
5 Ordinary Members.

Total 18

and after taking into account the loss by death, resignation and erasure, the total number of names of all classes on the roll amounts to 350, namely:—

25 Honorary Life Members.
113 Honorary Annual Members.
212 Ordinary Members.

Upon reference to the Financial Statement as certified by the auditors (see appendix), it will be seen that the balance standing to the credit of the Association after payment of all accounts due up to the 31st December, amounts to £3,324. 5s. 8d., as against £3,305. 12s. 3d., at the close of the preceding year, thus showing a surplus of £18. 13s. 5d. on the year's working.

The reason of the diminution in the net increase of the cash Balance, in comparison with recent years, is due to the abnormal number of payments under Rule 13, also to the loss of £70, on account of the final winding up of the Mechanics' Building Society.

Consequent upon the decrease in the number of Superannuants the Council are pleased to report that the payments to these members will be at the rate of 7/- per week from the commencement of the ensuing year.

It is with profound regret the Council have to record that during the year death has removed the following members,

brief memoirs of whom are appended on pages 284 to 286. In accordance with resolutions, letters of condolence and sympathy have been forwarded to the widows and families of the deceased members :—

Davis, J.	Manchester.
Hanning, J.	Paris.
Mc.Clement, D.	Manchester.
Pearson, R.	Stockton-on-Tees.
Senior, G.	Oxford.
Swallow, J.	Tiverton.
Williams, O.	Preston.

The following gentlemen have resigned their Membership in the Association during the past year :—

Fletcher, L. E.	Manchester.
Halliwell, J.	Do.
Strang, J. H.	Glasgow.

The following gentlemen have ceased to be Members of the Association during the past year :—

Farrar, J.	Barnsley.
Fletcher, J.	Swinton.
Hartley, J.	Hyde.
Mills, J.	Haslingden.
Schroller, J.	London.
Whittam, W.	Manchester.
Whittaker, S. W.	Rochdale.
Watkinson	Heywood.

The following gentlemen have been added to the Membership Roll during the past year :—

HONORARY MEMBERS.

Arnfield, T. O.	New Mills.
Dobson, B. A.	Bolton.
Fielden, G.	Oldham.
Fletcher, J. A.	Ashton-under-Lyne.
Fletcher, S. A.	Do.
Fowler, W. H.	Manchester.
Hodgson, H. E.	Cleckheaton.
Hopkinson, E.	Timperley.
Pickworth, C. N.	Manchester.
Riley, J. H.	Bury.
Longdin, T.	Manchester.
Shoubridge, S. Y.	Salford.
Walker, E. R.	Wigan.

ORDINARY MEMBERS.

Fox, W. - - - -	Manchester.
Mainwaring, H., Junr. -	Do.
Morris, J. - - - -	Salford.
Rendell, S. - - -	Fairfield.
Walton, T. . - -	Oldham.

From the following list it will be seen that the papers read during the year have been on subjects of considerable importance, as may be gathered from the exceptionally large attendances of members at these meetings, and the interesting discussions which ensued:—

PAPERS READ AND DISCUSSIONS HELD DURING THE YEAR.

14th Jan.—Inaugural Address by the President, Mr. Thos. Daniels, M.I.Mech.E., on "Capital and Labour in relation to the Engineering Trades."

28th Jan.—On "The Transmission of Power by Compressed Air," by Mr. W. J. Jenkins, Assoc.M.I.C.E., Manchester.

25th Feb.—On "Felt Hat Manufacture and Machinery," by Mr. J. Marshall, of Hyde.

11th Mar.—On "The relations between Employers and Workmen in Engineering works," by Mr. C. R. Iorns, of Broadheath.

25th Mar.—Discussion on do.

8th April.—On "The best design of Main and other Bearings.' A discussion introduced by Mr. A. Saxon, M.I.Mech.E.

28th Oct.—On "The Chicago Exhibition." Reminiscences of, by Mr. F. W. Follows, Mr. S. Boswell, and others.

11th Nov.—On "Heating, Humidity, and Ventilation," by Mr. Joseph Nasmith, of Manchester.

25th Nov.—On "The influence of some Chemical agents in producing injury to Iron and Steel," by Mr. W. Thomson, F.R.S.Ed., F.I.C., of Manchester.

Dec.—On "The Scientific Work of G. A. Hirn," by Mr. Bryan Donkin, M.Inst.C.E., of London.

ANNIVERSARY DINNER.

The Thirty-seventh Anniversary Dinner was held on Saturday evening, February 11th, at the Grand Hotel, Aytoun Street. Mr. T. Daniels, the President, occupied the chair, and amongst the company present were Mr. G. B. Goodfellow (past president), Mr. Alderman Bailey, Mr. J. Adamson, Mr. T. Ashbury, Mr. Councillor Saxon, Mr. Councillor Frankenburg, Dr. E. Hopkinson, Mr. H. Webb, Mr. L. B. Wells, Mr. W. Hunt (Lancashire and Yorkshire Railway), Mr. I. Levinstein, Mr. S. Y. Shoubridge, Mr. J. Walthew, Mr. B. A. Dobson (Bolton), M. J. West, and Mr. Stewart Garnett.

After the loyal toasts

Mr. J. Nasmith proposed "Our Municipal Corporations." He said that corporations, in addition to their ordinary work in connection with the good government of the municipality, had lately had added to their duties others which generations ago were not dreamt of, in the shape of very large powers in the direction of technical education; and the efforts that had been made in that direction, alike in Manchester and in some of the surrounding towns, had been such as no private individual or private body of men could have put forth. When they remembered the various criticisms that were continually poured upon town councils, it should not be forgotten that a town council was, after all, merely the reflex of the people who elected it, and that if they found a community which did not take an interest in the work of its corporation they might rest assured that the municipal work would be badly done, while in the opposite case they would get a wise and munificent administration.

Mr. Councillor Saxon, in responding, pointed out that that Association and the Manchester Corporation were very closely connected in regard to many of the great schemes of good government which corporations had to carry out. That was especially

the case with the system of electric lighting which, under the direction of Dr. Hopkinson, was in preparation. They had the Doctor's word for it that the system of electric lighting which was to be supplied to Manchester would be ready at the commencement of the coming winter, and they hoped when it was completed Dr. Hopkinson would be able to say that he had produced an electric plant second to none in the country. There were also the system furnishing hydraulic power, the main drainage system, and the disposal of our dry refuse, to the success of all of which the work of the engineer was essential.

Mr. Alderman Bailey, who also responded urged that it was incumbent upon engineers no less than upon other producers to prevent so large an amount of things being imported into this country from Germany, France, or America which we could produce ourselves at a good profit. He had been successful in doing something himself in that direction, and he hoped the matter would not be lost sight of by those present.

Mr. Frank Hazelton, the secretary, read an abstract of the report, which stated that the Council had pleasure in congratulating the members upon the continued success and progress of the Association.

Mr. B. A. Dobson proposed "Prosperity to the Association." He said with regard to the matter of technical education, it was evident, from what he had seen of the probabilities of the extension of education amongst workpeople, that master engineers and employés in positions over workmen would be forced to extend their education very much beyond what it had been up to now. Therefore, an Association of that kind must form a nucleus for giving to those who attended its meetings and discussions, not only knowledge of their own particular branch of business, but for teaching them where and how they failed in their general knowledge. The usefulness of an association of that kind was only limited by the members themselves, and if they chose to develop it and to make the best use of it, there could be no doubt that there was a very admirable future before it. (Hear, hear.)

The President, who responded, referred to the many advantages offered to members of the engineering profession

by the Association, and, in particular, to the good effected by its superannuation fund.

Mr. J. West proposed "The Guests," for whom Mr. Stewart Garnett, Mr. I. Levenstein, and Mr. S. Y. Shoubridge responded.

Mr. Levenstein, in the course of his reply, said that in chemical engineering there was a vast opportunity for the engineers of this country. If it was worth their while to look out for new branches of industry he believed chemical engineering was one of them. There was one other branch which had not been sufficiently recognised and appreciated in this country, but in regard to which their Continental rivals were making rapid strides--he meant electrolysis. There was no doubt that we were passing through a period of trade depression. Bimetallists told us that the fault lay with our monetary system, fair traders told us that Free Trade was a delusion, and he heard the President of the Manchester Chamber of Commerce say, recently, that prosperity would never return until Continental nations had disbanded their huge armies. He believed, however, that prosperity and supremacy in trade and industry would rest with that nation which was able to take into the field the largest army of highly trained and educated men.—(Applause.) We had in this country splendid material, men highly developed in physical sense, and full of energy, pluck, perseverance, and endurance. Give them but improved technical education, and it would be seen that they would fight not only successfully the battle of competition, but would further extent the supremacy of the trade and industry of this country.—(Applause)

Mr. T. Ashbury proposed "The Engineering Profession," which was acknowledged by Mr. W. Hunt, Mr. L. B. Wells, and Dr. E. Hopkinson.

The toast of "The Chairman," proposed by Mr. G. B. Goodfellow, having been honoured, the company separated.

An enjoyable programme of vocal music was rendered by Mr. J. H. Greenwood, Messrs. Blacow, Barrow, and Griffiths.

LIBRARY.

The following books have been purchased for the Library during the past year :—

Handbook of the Steam Engine.	Haeder & Powles.
Helical Gears.	
Hydraulic Power and Machinery.	Robinson.
Mill Gearing.	Box.

The Association Exchange Transactions with the following :—

American Institute of Mining Engineers.
,, Mechanical Engineers.
Canadian Society of Civil Engineers.
Engine, Boiler, and Employers' Liability Insurance Company.
Franklin Institute, America.
Institution of Civil Engineers of England.
,, Engineers and Shipbuilders in Scotland.
,, Mechanical Engineers.
,, Civil Engineers of Ireland.
Iron and Steel Institute.
Liverpool Engineering Society.
Manchester Geological Society.
,, Literary and Philosophical Society.
Midland Institute of Mining, Civil, and Mechanical Engineers.
Mining Association and Institute of Cornwall.
Mining Institute of Scotland.
National Boiler Insurance Co.
North of England Institute of Mining and Mechanical Engineers.
North-East Coast of Engineers and Shipbuilders.
Philosophical Society of Glasgow.
Royal Scottish Society of Arts.
South Wales Institute of Engineers.
Society of Engineers.

The following Publications are received periodically:—

Colliery Guardian.
Electrical Review.
Engineer.
Engineering.
Industries and Iron.
Iron and Steel Trades' Review.
Marine Engineer.
Mechanical World.
Practical Engineer.
Textile Mercury.
,, Recorder.

OPENING OF DISCUSSION SESSION.

The 38th Discussion Session was opened on Saturday, October 14th, by a Social Gathering at the Grand Hotel, Manchester, 67 members being present, the chair being taken by Mr. Thomas Daniels, the president. One feature of the evening was an exhibition of models and instruments of ingenious mechanism, together with photographs of special engineering work. These included a new boiler inspector's test guage, a Thompson indicator, with reducing gear and two pistons, a tachometer, and a sight-feed lubricator, exhibited by Messrs. Schaffer and Budenburg; a Tabor indicator and Tabor revolution counter, with a novel diagram averaging instrument, by the Globe Engineering Company; an excellent model of the Well's light; photographs of modern engines recently built by Messrs. Saxon Brothers, Manchester; and the most recent improvements in mechanical gas stoking appliances, by the West's Gas Improvement Company, Limited.

The President, in the course of a short address, said that in addition to the interesting programme which had been got together, of papers for the ensuing session, they had hoped that papers would have been read on the Manchester Ship Canal, and the Thirlmere Water Scheme, but as these undertakings were not yet completed, they were reserved for the next session of the Society. The exhibition of models, &c., although not perhaps so large as they would have liked to see, was a step in the right direction, and he hoped that it would be repeated in succeeding years. During the course of his remarks, the President referred to the disastrous result of the protracted coal stoppage, and expressed the opinion that the coal owners had made a mistake not only in at first asking for 25 per cent., but also in holding out for a 15 per cent. reduction in wages after the mayors at Sheffield had proposed a compromise on the basis of 10 per cent. With regard to the Syndicate proposed by Sir George Elliot, he had not much confidence in the success of such arrangements, and if the coal owners and colliers were absolutely unable themselves to manage their own business, he would rather see the fuel supplies of the country in the hands of the Government than in those of a Syndicate.

During the evening a programme of vocal and instrumental music was contributed by Mr. W. Cooper and friends, and the proceedings closed with the usual vote of thanks.

The review of the past year would be certainly incomplete without reference to the exceptional success of the three visits made during the year, and of especially conveying to Messrs Henry and George Webb the Council's appreciation of the hearty and generous manner in which they entertained the Association on its visit to Bury. And similarly to Mr. T. Boumphrey, General Manager, Cunard Steamship Company, for the excellent arrangements made and generosity evinced by him on the visit to the "Campania."

Finally, the Council have pleasure in expressing their deep indebtedness to the authors of papers and to those gentlemen who have contributed to the discussions. At the same time the Council rely upon the zealous co-operation of every member in making this department the leading, as it is without doubt, the most important object of the Association.

OBITUARY.

Mr. Joseph Davis, M.I.M.E., was for twenty-one years engaged in the service of the Lancashire and Yorkshire Railway Company. At the age of fourteen he was apprenticed to Messrs. Dunn, Hattersley, and Company, engineers, of Pendleton, a firm of some repute in those day as makers, exclusively of railway machinery. The training he received here prepared him in a peculiar way for the career he was destined to follow in later years as an assistant mechanical railway engineer. With this firm he continued until the death of the surviving partner, Mr. Dunn. Subsequently for two years he was with the firm of Messrs. Platt Bros., of Oldham, under Mr. Richardson, and was next employed in the drawing office of Messrs. Wren and Hopkinson, engineers and millwrights of this city, as their chief draughtsman. Whilst acting in this capacity the directors of the Lancashire and Yorkshire Railway Company seeking some less costly way of marshalling their goods trains than the man and horse method then employed, instructed Messrs. Wren and Hopkinson to supply a plant for working the heavy traffic at the Oldham Road Goods Station by mechanical means, which scheme was prepared and carried out under Mr. Davis's direction. Until this time the loaded waggons had been drawn about the goods yard by chain-horses, each horse

being attended by a driver, and two or three full waggons constituted a load. By the new method iron capstans, placed upon the ground at convenient distances about the goods yard, were caused to revolve by shafts turning in iron troughs below the ground, which in their turn received their motion from engines that worked night and day. By hooking a rope to a train of waggons and bending it firmly round one of these revolving capstans, one man was able to set a long train in motion. The employment of horses was thus dispensed with, and the number of men greatly reduced.

The experiment proving successful, it was decided to extend the principle as far as possible, and shortly afterwards Mr. Davis entered the service of the railway company in charge of the bridges and machinery department under the late Mr. Sturgess Meek, the engineer-in-chief to the company, who has since been succeeded by Mr. W. Hunt, C.E. The first work under his new appointment was the Goods Station, in Bailey Street, Salford, erected on the site of the Old Bailey Prison. From this time, under his direction, mechanical power rapidly replaced manual and horse labour throughout the goods' yards and warehouses of the company's system; and such was the confidence he had inspired that, in the year 1880, he was sent out by the company to the United States to inquire into the American system of discharging grain cargoes in bulk. The result of this journey was the construction under his direction, about nine years ago, of the great grain elevator at Fleetwood, the first erected in this country on the American principle, by which ships entering the port can have their cargoes of loose grain discharged in a couple of days, either into warehouses or weighed and delivered into carts and waggons, the whole process being done by machinery.

The carriage and waggon works at Newton Heath, with its wonderful arrangement of machinery, was also carried out under the charge of Mr. Davis, and is another of those establishments for the mechanical execution of work which has placed the Lancashire and Yorkshire Company in this respect in the front rank amongst the railway companies of the county. Whilst engaged upon these more complete and self-contained engineering schemes, Mr. Davis's attention was constantly occupied with the structural iron work required in the ever-extending system of the company, and in the continual renewal and maintenance of the bridges and iron station roofs on the old lines. By his death the company lose an experienced, conscientious, and highly appreciated servant, and his friends a companion whose bright spirit and unvarying gentleness and geniality made his acquaintance a valued possession to all who knew him.

He was elected an Ordinary Member of this Association in 1871, and died 15th November, 1893, in the 54th year of his age.

James Hanning was elected an Ordinary Member of the Association in 1858. For a many years past he resided in Paris, but notwithstanding this he took considerable interest in the work of the Associatien.

He died suddenly, January 28th, aged 63 years.

Donald McClement received his engineering training with Messrs. A. Barclay & Son, Engineers, Kilmarnock. Subsequently he was engaged with the firms of Atley & Maclellan, of Glasgow, J. Musgrave & Sons, Limited, of Bolton, and finally with the Globe Engineering Company, of Manchester.

In Mr. McClement the Association, undoubtedly, has lost one who promised to be a very valuable member, as just before his death he had in preparation for communicating to the Association an interesting paper on High-speed Engines.

He died suddenly, September 22nd, 1893, in the 26th year of his age.

Richard Pearson was elected an Ordinary Member of the Association in 1866, and died 17th May, 1893, at Stockton-on-Tees, in the 67th year of his age.

George Beckett Senior was elected an Ordinary Member of the Association in 1883. He received his engineering training as a premium apprentice with Messrs. Beyer, Peacock & Co., and subsequently spent some years in Canada. At the time of his death he was engaged at the Eagle Iron Works, Oxford.

He died March 15th, 1893, in the 49th year of his age.

J. Swallow was elected an Ordinary Member of the Association in 1859, and at the time of his decease was engaged with Messrs. J. Heathcoat & Co., of Tiverton, Devonshire, with which firm he had been since the year 1883.

He died 13th Febrbary, 1893, aged 72 years.

Owen Williams was elected an Ordinary Member of the Association in 1860.

He died September 27th, 1893, in the 75th year of his age.

REPORTS OF EXCURSIONS.

Visit to Peel Mills, Bury.—On Thursday afternoon, April 27th, about 120 members of the Manchester Association of Engineers paid a visit to Peel Mills, Bury, for the purpose of inspecting the quadruple expansion engines there. The party left Manchester by the 2-20 train, and on arriving in Bury were met at the railway station by Messrs. H. and G. Webb, Mr. W. Ashworth, and several other directors of the company. They at once proceeded to the mill, where Mr. H. Webb extended a hearty welcome to all, and apologised for the absence of the Mayor and Town Clerk, who would have been present if it were not for the funeral service of the late Lord Derby at the Parish Church. The party then divided into three

sections, No. 1 being under the leadership of Mr. H. Webb, No. 2 in charge of Mr. W. Ashworth, and No. 3 under the care of Mr. T. Mercer, the manager. The first section commenced their peregrinations by visiting the boiler-house, which is fitted up with eight boilers, Lancashire type, seven of which were in full work. All the boilers are fitted with Vicar's mechanical stokers, and the coal is automatically supplied by means of elevators and conveyers. The railway trucks containing the coal are run into the private siding close to the boiler-house, and beneath the lines of rails a series of large cast-iron storage hoppers or bins have been erected. The trucks used have loose bottoms, so that immediately they arrive over the hoppers the coal can be instantly deposited into the latter through the bottom of each waggon, thereby dispensing with the slow and laborious method of unloading by hand. The storage hoppers taper towards the bottom and are fitted with sliding doors, which permit the requisite amount of coal necessary to fall upon the conveyers placed longitudinally under hoppers, These carry the coal to the elevators, which, after raising it, deposit the same in special conveyers fixed immediately above the hoppers of the mechanical stokers, and extending the whole length of the boiler fronts, from whence it is then delivered into the various mechanical stokers as required. This arrangement necessitated only two men being in charge of the whole of the boilers. After staying here about ten minutes the party proceeded to the engine house attached to No. 1 Mill, which has 79,000 spindles, where there is a side-by-side compound engine. The cylinders are 32in. and 56in. diameter; stroke of piston 6ft.; revolutions per minute 50½; piston speed 600 feet. The air pump, which is situated below the floor line, and is driven by means of rods and levers from the low pressure crosshead, is 39in. diameter and 31in. stroke. The rope pulley, weighing 65 tons, is 32ft. diameter, and is grooved for 30 ropes 1⅝in. diameter. The crank shaft necks are 16in. diameter and 28in. long, and the crank pins 9in. diameter and 11in. long. The high pressure cylinder is fitted with Corliss valves, and the trip motion to the admission valve is under the control of the govenor which may vary the point of cut-off from 0 to ¾ strokes. The low pressure cylinder is fitted with slide valves, which are adjusted by hand to vary the point of cut-off. The average indicated horse power is 1,145, and the total coal burned per I.H.P. per hour, including the heating of the mill, is 2·356lbs. After a lengthy stay here the party wended their way to the dynamo-house, both mills being lighted throughout by electricity. The power for driving dynamos—two in number—is obtained from two vertical engines. There are two distinct circuits in each mill run by separate dynamos, and all through the buildings lamps are so arranged that every alternate row of lights is supplied by one dynamo, so that in the event of the main fuse of any circuit melting, every alternative lamp between each pair of mules would be alight, and thus give ample light to prevent any accident occurring. It is stated that the installation is without doubt one of the most efficient that has been fitted in Lancashire. A visit was then paid to the engine-house attached to No. 2 Mill, which contains 100,000 spindles. This mill is driven by a quadruple expansion engine—the "Majestic"—working at 200lbs. pressure, made by

Messrs. John Musgrave and Sons, Limited, Bolton. This being the first of their kind applied to such a purpose with high pressure, considerable interest was manifested in its construction by the visitors. The engine is of a vertical type, and is provided with Corliss valves throughout. The cylinders are 18in., 26in., 37in., and 54in. diameter, with a stroke of piston of 4ft. 6in. The engine developes 1.600 h.p. when working with 200lbs. pressure. A special feature is the triangular connecting rod, the action of which is such that there are no dead centres. The general appearance of the engine is very neat and it is remarkably compact. The party afterwards went through No. 2 Mill, the various processes of cotton spinning being watched with deep interest. The other sections also visited the places mentioned above, and various members were conveyed through the mill, under the guidance of Mr. Mercer, jun., and Mr. M. Warburton. Ultimately, at about quarter past five o'clock, the sections amalgamated at the entrance of the mill, where conveyances were awaiting to convey the party to the Philips Hall, where an excellent tea had been provided by Messrs. H. and G. Webb, the hosts.

Amongst those present were the Mayor (Alderman Parks), the Town Clerk (Mr. J. Haslam), the Borough Surveyor (Mr. J. Carwright), Alderman Brierley, Councillors Butcher, J. Hall, and J. Ashworth, and Messrs. G, Horridge, Mercer, E. Simpkin, &c., whilst the visitors included Messrs. Thomas Daniels (president), manager for Messrs. Naysmith and Co., Patricroft; F. Hazleton (secretary), T. Ashbury (Manchester), F. Lane. manager Ashbury Carriage Co.; J. West, of Albion Works, Miles Platting; J. Walthew, of Messrs. Galloway and Co's, Manchester; E. Marshall of Bentley and Co.'s, Manchester; T. Halsall, Locomotive Department, Midland Railway, of Derby; A Saxon (Openshaw), H. Bates (Salford), H. Mainwaring (Manchester), G. B. Goodfellow, T. Beeley, and J. Adamson, of Hyde.

After tea, the President (Mr. Daniels), said it went without saying that they had enjoyed themselves. It was not often they got such a treat as they had had that day. They had had both a mechanical treat and a treat of a good tea. He must say when they came to look at the mill they had been through, that one said to himself it was not a question of winning the race with a horse like that because it would be over, but it was the conditions they had to contend with, such as foreign competition, They had to contend with lower wages and longer hours, and great variation in railway rates. All these things they had to contend with in working a mill of this description. When they saw the splendid machinery and the splendid system of getting the work done from the raw material to the finished goods, they would not be surprised they got good results in Bury. Speaking of railway enterprise and railway rates, he said the railways encouraged people to go to the sea-side, and pleasure trips, and everyone except business men—(hear, hear),—and somehow or other they did not seem to make any attempts to assist commerce. They knew very well it was a penny a mile 40 years ago and it seemed to be a penny a mile

now. He thought it was quite time they had two miles for 1½d. (Laughter.) Speaking of the mill they had visited he said if there was anything which would make this mill a success it would be because it bore the name of Peel, who was one of those men who added to the greatness of Bury. They read that in 1770 the inhabitants of Bury used to watch the train of pack horses coming over Cockey Moor from Bolton, and the first horse would be decorated with bells to indicate its approach. Now in 1870 the inhabitants of Bury, instead of seeing the pack horse, saw the railway locomotive bringing similar packages, and intimating its approach by blowing its whistle. If so be they could get leave of absence and pay a flying visit to Bury in 1970 they would probably see similar packages flying along electric cables at as great a speed as could be attained without the packages coming asunder. He must say their members had attended well on that occasion, and the only reason he could give for that was because they were coming to Bury. They knew there were a lot of good things in Bury, and they knew how to do a thing well in Bury. (Hear, hear.) When they came to look through the history of Lancashire they would find that Bury had contributed more than any other town to the trade and commerce of Lancashire and to the welfare of the county.

Mr. Ashbury then moved a vote of thanks to Messrs. Webb. He said their president had reminded them of the historical associations of Bury. They had been that day on the spot where the great Sir Robert Peel was born. The first steam engine applied to cotton factories was applied a little before the first import of North American and East Indian cotton into this county, to a mill at Warrington by Messrs. Peel. They had seen that day the last development of cotton factory engine driving and the quadruple engine. It seemed strange that the very first steam engine put in was by Messrs. Peel, and that day they had gone through Peel Mill. They had been delighted with what they had seen, and he might say they had been in the county towns of Lancaster and Derby, the seaports of Birkenhead and Liverpool, the Midland towns of Sheffield and Gainsborough, and the railway towns of Crewe and Horwich, and been well received, but he thought the visit to Bury would be unique as far as this was concerned—that he believed that was the first time they had been honoured with the presence of the Mayor of the town they had visited. (Hear, hear, and applause.) He was reminded that in this county, a little over 100 years ago, as showing the difference between now and then, that at the County Assizes, a German was fined £500 for trying to induce some cotton operatives in this county to go to Germany. The year after another German was fined £200 for having in his possession cotton machinery which he was trying to get out of the country and take to Germany. Now we had got more generous, and had given a great deal of our talent and brains to other countries, and it behoved us now to make use of every possible invention, that our economies might be permanent. In the mill there was the grand engine put in by one of the members of the Association, and the boilers were also put in by a member, and their host, to whom they were indebted for the visit, was also one of

their members. So far as their Association was concerned the name of Bury and Webb would be synonymous terms, and they would have fragrant remembrances of their visit whenever they thought of Mr. Webb. He had great pleasure in asking them to record a most hearty vote of thanks to their esteemed member, Mr. H. Webb, and through him to the directors of the Peel Mill, and also to the Mayor for honouring them with his presence that evening. He hoped they would have another opportunity of coming to Bury and seeing other notable things in connection with this place.

The motion was carried by acclamation, after which "For he's a jolly good fellow," was sung.

The Mayor, after expressing thanks for the manner in which he had been received, said he was proud to be the first mayor that had met such a handsome deputation as the present one. He was proud to be present that afternoon because he looked upon the gentlemen assembled as the very pick of the engineering profession in this county. He was heartily pleased to welcome them to Bury, and he hoped that would not be the only occasion on which they would have to come and view some splendid works in Bury, because he happened to be chairman of a mill which is in course of construction. They had not gone in for quadruple expansion engines because they were quite content to have triple expansion engines. He dared say the engine and boilers and very likely the machinery had been made by members of their Association, and when completed they would have a mill second to none in Lancashire. He had not the slightest doubt that the directors of that mill would be glad to welcome the association on some occasion. With regard to Peel Mill he thought they had a very good example of what energy would do, energy under adverse circumstances. (Applause.) He believed the Board of Peel Mill had done a great deal to push forward the industries of Bury, and he thought the last mill they had built was a fine specimen of what energy may do. He only hoped they might go on and continue in the future as in the past. He believed they had been doing very well, and as he happened to be a shareholder he was not sorry for that. (Hear, hear, and laughter.) He hoped in the future they would have more mills in Bury on the same lines as the Peel and Vulcan mills were built, and that Bury would go on and prosper in the future far more that it had done in the past. (Applause.) Bury was about the centre of the universe. (Laughter.) He believed there was no town better situated than Bury both for developing and carrying on a variety of industries. (Applause.)

Mr. H. Webb returned thanks on behalf of himself and his brother, and reminded them of the object of that meeting. He also reminded them of a meeting of the Association in Manchester, when it was stated that the directors of Peel Mill had had the courage to order a quadruple expansion engine to work at 200lbs. pressure, and he promised them at some future time they should pay a visit to the mills and see these engines. They had done so, and he hoped they would carry away a good impression. He proceeded to emphasise the fact that Bury was the centre of the earth, and said they were favoured with the Mayor and Town Clerk, the ex-Mayor, the

ex-ex-Mayor, and the Borough Surveyor, all to prove the fact that Bury was the hub of the universe, and if they had to make a speech they would tell them it was well sewered, and that the streets were well paved, even the back streets. He would remind their Oldham friends about that. (Laughter.) In the back streets of Bury they could take up a cart easily, but in Oldham they could hardly take a wheelbarrow up some of the back streets. They in Bury had been very generous. So far back as they could remember, the landlord had told them they could put all their sewage in the river, and make a present of all they did not like to Salford and Manchester. They had done that to the letter, but somehow or other Salford and Manchester had not been grateful, and wanted them to keep the things to themselves. They turned to the landlord, but he said he would have nothing to do with it, and that they could please themselves. They had some very good buildings in Bury, and the streets had improved very rapidly. Compared with other towns, they were rated very low, but the members of the Town Council in their public speeches had informed them that they would not keep long behind, and did not intend to be second to anybody, (Laughter.) In Bury they had a great variety of trades, engineering, machinery making, paper making machinery, loom making, calico printing, bleaching, felt hat making, not to speak of the cotton trade, so that they were not all depressed at once and they did not suffer so much as some other places. Bury had always been noted for its letterpress printing and held its own yet. It had been noted for its black puddings—(laughter)—and as they knew Bury Simnels had a world-wide fame. It was also surrounded by some very notable places. Within a mile of that hall he could take them to Scotland and Nineveh and the land of Goshen and Britain, and the authorities had been so kind as to have built a palace at a lovely spot called Jericho where anyone who was weary of this world of worry and bustle could retire if they choose. In concluding he expressed the hope that the visitors had enjoyed themselves and that they would carry away with them happy recollections of their visit to Bury. (Applause.)

Visit to Liverpool and Inspection of *S. S. Campania.*—On Thursday, the 17th of August, the members and lady friends (numbering about 170), were through the kindness of Mr. T. Boumphrey, the general manager of the Cunard Steamship Company, afforded an opportunity of inspecting the "Campania," the most recent addition to their well-known line of Atlantic steamers. The party, which included Mr. Thomas Daniels (the president), Alderman W. H. Bailey, Alderman Bosdin T. Leech, and many representative engineering employers of Manchester, were on arrival at the Prince's Landing Stage, Liverpool, conveyed by special tender to the "Campania," over which they were conducted by the principal officers of the ship, refreshments being provided for the visitors in the main saloon. The members of the society, who were of course chiefly interested in the powerful engines and general motive-power equipment of the vessel, spent most of their time below decks, but the numerous lady visitors who accompanied

the party were greatly taken up with the magnificence of the various saloons for both first and second-class passengers, the music saloon exciting the general admiration of all, as also the state rooms, and the elegant and luxurious accommodation provided throughout. Returning to Liverpool, the members and friends sat down to tea at the Bear's Paw Restaurant, after which short complimentary speeches followed.

The President remarked that as Manchester and Salford were now on the threshold of becoming actual seaports themselves, the members of that Association were naturally anxious to inspect the latest developments of modern shipbuilding in the shape of the "Campania," and he was sure their visit to that splendidly finished and equipped steamship had been of the greatest interest to all.

Alderman Bailey, in proposing a vote of thanks to the Cunard Steamship Company for the manner in which they had entertained the members of that society, after briefly alluding to the extraordinary development during a comparatively short period which had taken place in shipbuilding, of which they had seen the latest illustration in the "Campania," said that with regard to the Manchester Ship Canal, to which their President had referred, he had no hesitation in confirming the statement that the canal would be completed by February next, and he created some amusement by the remark that the Ship Canal Company had spent more money in less time than had ever been spent in any civil or mechanical engineering undertaking in the world. They had spent fifteen millions sterling in seven years, but they could depend upon it that in accordance with the traditions of Lancashire people, they would have their money's worth for what had been spent. He did not want to prophesy, but he would say that the construction of the Ship Canal would redound to the commercial prosperity of Lancashire, and be one of the successes of the nineteenth century.

Mr. Thomas Ashbury, in seconding the proposal, said that the members hoped that the next time they had an opportunity of making a similar visit to Liverpool they would be enabled to come all the way by steamship from their own docks in Manchester and Salford.

Mr. John Wilson, the oldest member of the Association, and who was humorously referred to as "Number One," on being called upon to add a few remarks, made some interesting observations with regard to the wonderful progress which had been made in shipbuilding since he was first associated with the Cunard Line in 1838. He could remember the time when the boilers on the first steamer on which he was engaged were only made to carry a pressure of steam of 4lbs. to the square inch, and the shafts, instead of being made of solid steel, were built up in boiler plates.

The vote of thanks having been most heartily accorded, the proceedings terminated, the members returning to Manchester by special saloon train.

Visit to Macclesfield.—On Saturday, June 17th, the members and lady friends had their annual summer excursion, when a party of about fifty proceeded to Macclesfield and Alderley by the 9-45 a.m. train. The

excursion was not so much devoted, as on previous occasions, to visiting works of special engineering interest, but at Macclesfield the various silk manufacturers threw open their mills for the inspection of the members and their friends, and several establishments—those of Messrs. J. and C. Brocklehurst, and Messrs. Smales and Co.—were inspected, the various processes, and the most recent improvements in machinery, being explained to the members, whilst a visit was also paid to the "Globe" cotton spinning and weaving mills. After a very busy morning spent in this manner, the members and friends sat down to lunch at the Pack Horse Hotel, and Mr. T. Daniels, the president, tendered, on behalf of the party, their hearty thanks to the proprietors and officials of the various mills for the opportunities afforded for inspecting their establishments. The party afterwards proceeded by carriages to Alderley Edge, where tea was served at the Queen's Hotel, after which the picturesque district of the Edge and its surroundings were viewed by the visitors. The varied programme was greatly appreciated, and the pleasure and enjoyment of the party was enhanced by the beautiful weather, all of which tendered to make the excursion a success.

Treasurer's General Cash Account, for Year ending 31st December, 1893.

Dr. (Including Superannuation Fund Account.) **Cr.**

1893.			£	s.	d.
Jan. 1.	To Balance as per last Report		3305	12	3
Dec. 31.	„ Contributions and Entrance Fees		458	1	6
	„ Transactions—sold		6	16	0
	„ Interest from Loans in Building Societies	£17 0 0			
	„ „ „ Mortgages on Properties	95 2 2			
	„ „ „ Bank	2 3 3			
			114	5	5
			£3884	15	2

1893.				£	s.	d.
Jan. 1.	By Rent—Grand Hotel			20	0	0
to	„ Secretary's Salary	£30 0 0				
Dec. 31.	„ Librarian's „	10 0 0				
				40	0	0
	„ Superannuation Allowance			92	14	0
	„ Printing, Stationery and Bookbinding			190	6	6
	„ Books purchased for Library			8	12	5
	„ Insurance premium on Library			0	6	0
	„ Thirty-seventh Anniversary Dinner			15	18	3
	„ Audit and Committee Expenses, Postage and Petty Cash and expenses in connection with Social Meeting			76	4	10
	„ Advertisements: "City News"			1	7	6
	„ Funeral Allowances: Mr. J. Hanning	£10 0 0				
	„ J. Swallow	10 0 0				
	„ G. Senior	10 0 0				
	„ R. Pearson	10 0 0				
	„ O. Williams	10 0 0				
				50	0	0
	„ Loss in Mechanics Building Society			70	0	0
	„ Cash Invested as Loans in Building Societies	550 0 0				
	„ „ Advanced on Properties (Mortgages)	2400 0 0				
	„ „ in Bank	323 14 0				
	„ „ „ Treasurer's hands	28 19 0				
	„ „ „ Secretary's hands	26 12 8				
				3324	5	8
				£3884	15	2

Audited and found correct,

I SIMPSON,
R. PARRY,
T. SETTLE,
} AUDITORS.

9th Sept., 1893.
9th Jan., 1894.

Superannuation Fund Account, for Year ending 31st December, 1893.

Dr. (Included in General Account.) **Cr.**

1893.		£	s.	d.	£	s.	d.
Jan. 1.	To Capital invested as per Resolution passed at the Half-yearly Meeting, 14th June, 1879 ..	2100	0	0			
	,, Additional Capital voted at the Annual Meeting, 13th December, 1884	300	0	0			
	,, Additional Capital voted at the Annual Meeting, 12th Dec., 1891	600	0	0			
					3000	0	0
Dec. 31.	,, Twelve Months' Interest on Capital Invested as per General Account.....				114	5	5
					£3114	5	5

1893.		£	s.	d.	£	s.	d.
Jan. 1. to Dec. 31.	By Superannuation Allowance:—						
	Mr. Owen Williams	9	15	0			
	,, John R. Wolstenholme....	13	14	0			
	,, Richard Pearson.....	4	5	0			
	,, Fred Meixner	13	0	0			
	,, George Vickers	13	0	0			
	,, William Holmes.....	13	0	0			
	,, John Dutton	13	0	0			
	,, James Scholfield	13	0	0			
					92	14	0
	,, Repayment of Overdraft from General A/c, 1892				5	10	4
	,, Balance to credit of Superannuation Fund Account				3016	1	1
					£3114	5	5

Audited and found correct,

I. SIMPSON,
R. PARRY,
T. SETTLE,
} AUDITORS.

9th January, 1894.